380 SERIES HOOK BLOCKS

- Wide range of product available.
  - Capacity: 5 to 300 Tons - Larger Models Available.
  - Sheave Sizes: 10” to 30”.
  - Wireline Sizes: 7/16” to 1-3/8”.
- Manufactured by an ISO 9001 and API Q1 certified facility.
- All single point shank hooks are genuine Crosby®, forged alloy steel, Quenched and Tempered, and have the patented **QUIC-CHECK®** markings (Duplex hooks are available on all sizes).
- All 380 Blocks are furnished standard with Roller Bearings.
- Reeving Guide Standard – All Models.
- Blocks thru 25 tons use 319N style hooks with S-4320 latches.
- Sheaves lubrication through center pin – separate lube channel to each bearing.
- Sheave fully protected by side plates.
- Dual action hook (swings and rotates).
- Repair parts available through worldwide distribution network.
- Design Factor of 4 to 1 (unless otherwise noted).
- All 380 blocks 16” and larger are furnished with McKissick® Roll-Forged sheaves with flame hardened grooves.
- “Look for the Orange Hook . . . the mark of genuine McKissick® quality”.

SEE APPLICATION AND WARNING INFORMATION
On Pages 381-388
Para Español: www.thecrosbygroup.com

OPTIONS AVAILABLE

- Bronze Bushed Sheaves
- Duplex Hooks
- Swivel Tee and Shackle Assemblies
- Sheave Shrouds
- Anti Rotation Hook - Locking Device
- Plate Steel Cheek Weights
- Third party testing with Certification available upon request.

380
Series Hook Block

Dead End Chart
(Double, Triple, & Quad Sheave Blocks*)

Wireline Size (in.)	Dimensions (in.)		Recommended Wedge Socket	
			McKissick® US-422 / US-422T Utility Socket	
	T Thickness	U Hole Diameter	Stock No.	Size
7/16	1.00	1.28	1044309+	US4 7/16
1/2	1.00	1.28	1044318+	US4 1/2
9/16	1.00	1.28	1044336+	US5 9/16
5/8	1.00	1.28	1044345+	US5 5/8
3/4	1.25	1.66	1044363+	US6 3/4
7/8	1.25	1.66	1038580	US7 7/8
1	1.25	1.66	1044417+	US8 1
1-1/8	1.75	2.56	1044426+	US10 1-1/8
1-1/4	1.75	2.56	1044435+	US10 1-1/4

* To find Dead End Dimensions for Single Sheave blocks, refer to block tables on pages 313.

\+ US-422T Terminator Style.

The patented McKissick Split-Nut® is the standard retention system for standard crane blocks up to 100 Tons.

For custom orders contact our Block Hotline at:
(800) 727-1555 or refer to the special request form on page 454.

Copyright © 2016 The Crosby Group LLC All Rights Reserved

381 – SINGLE

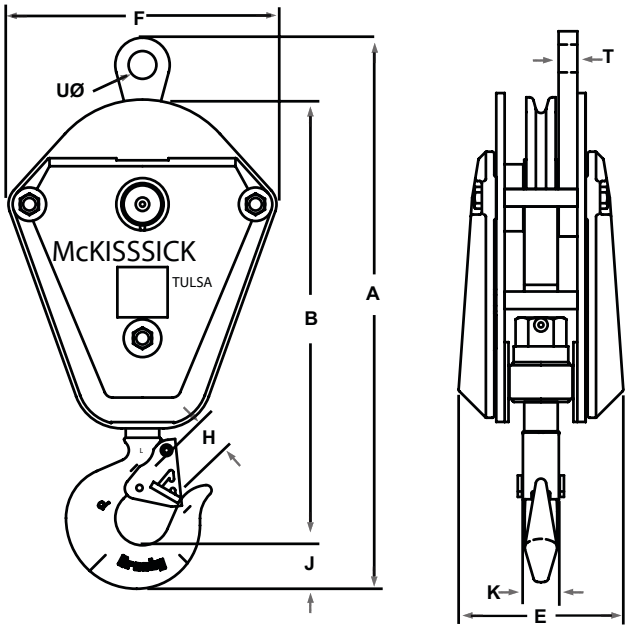

382 – DOUBLE

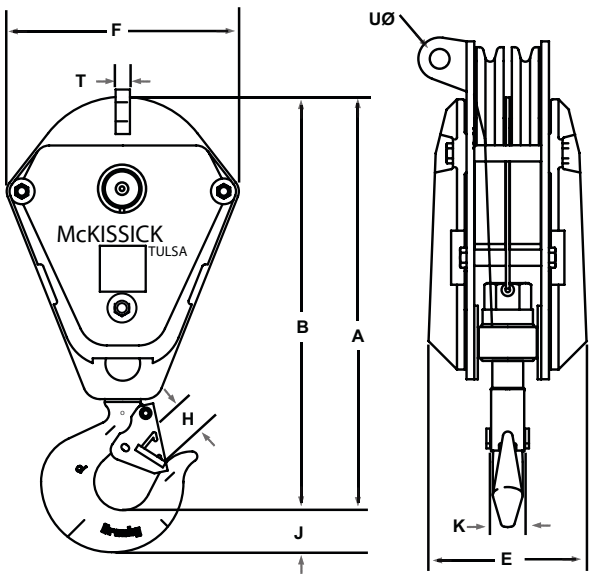

383 – TRIPLE

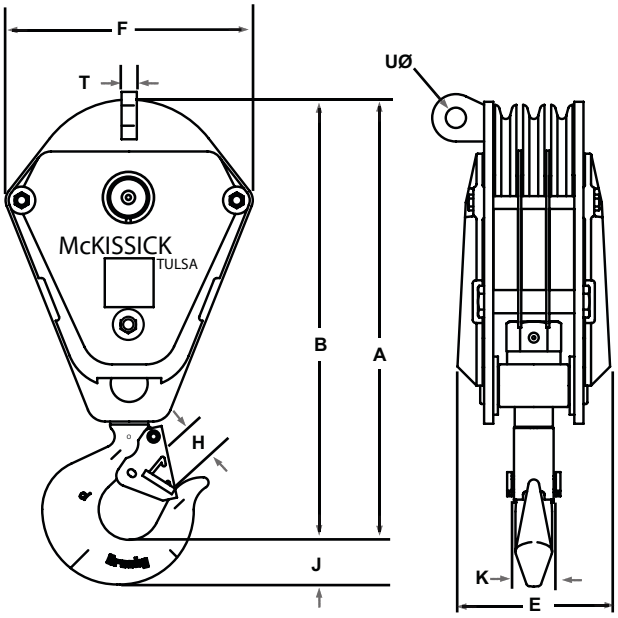

384 – QUAD

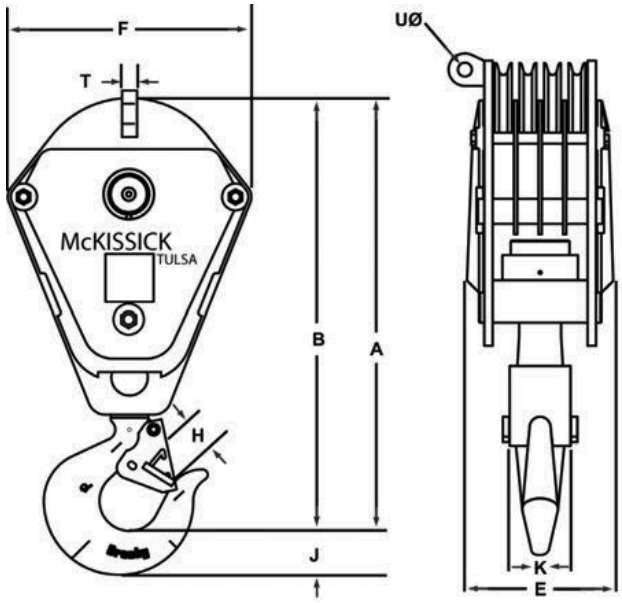

Thickness (E) shown is for blocks containing cheek weights (Light Medium - LM, Medium - M, and Heavy - H).
The Thickness (E) for non weighted blocks (Light - L) is measured over side plates.

Copyright © 2016 The Crosby Group LLC All Rights Reserved

McKissick® Utility Crane Blocks

385 – QUINTUPLE

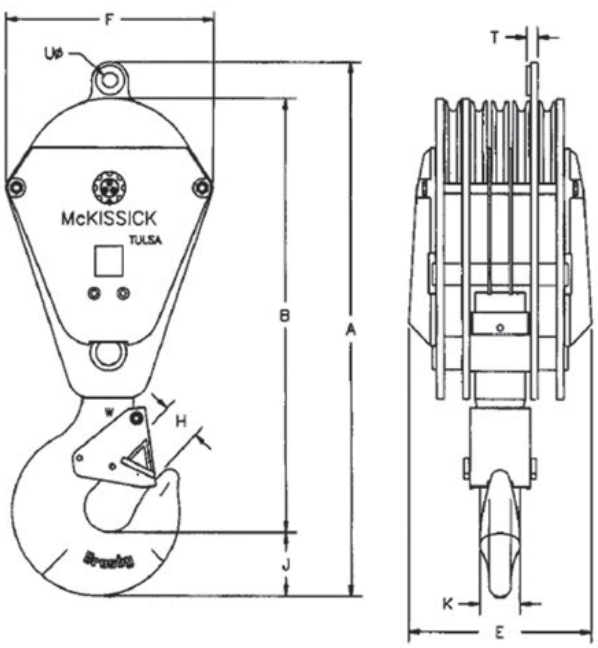

386 – SEXTUPLE

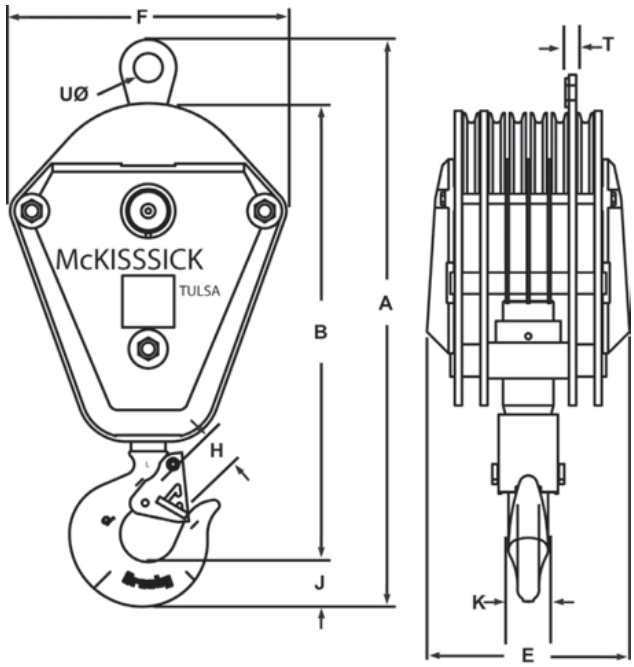

387 – SEPTUPLE

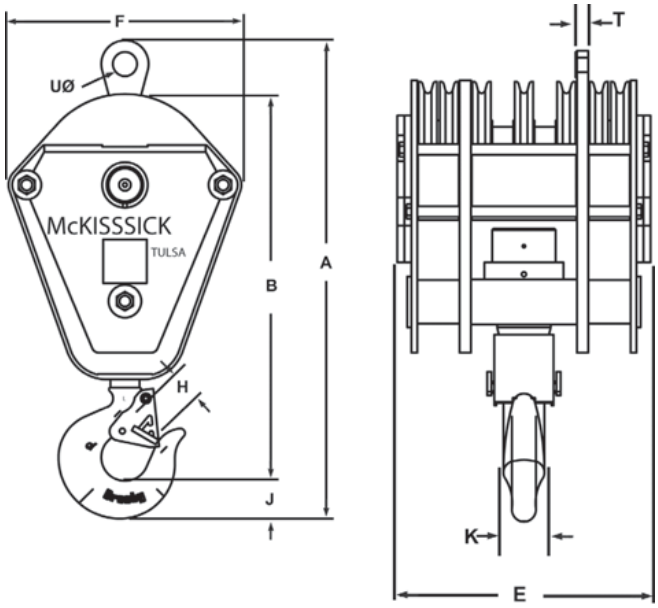

388 – OCTUPLE

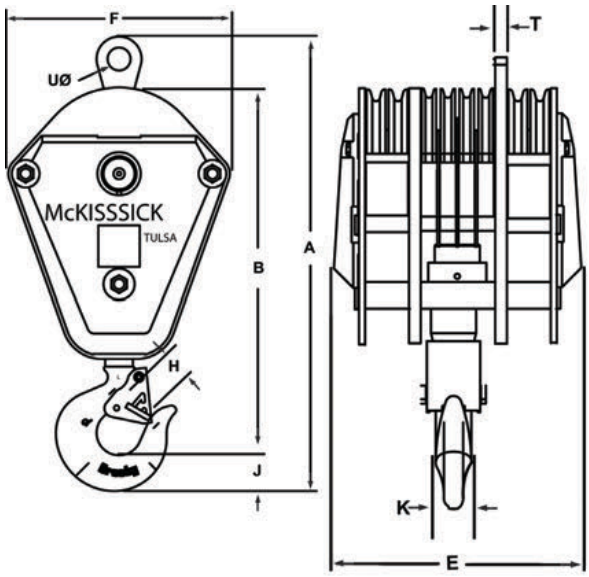

Thickness (E) shown is for blocks containing cheek weights (Light Medium - LM, Medium - M, and Heavy - H).
The Thickness (E) for non weighted blocks (Light - L) is measured over side plates.

Copyright © 2016 The Crosby Group LLC All Rights Reserved

McKissick® 380 Series Crane Blocks

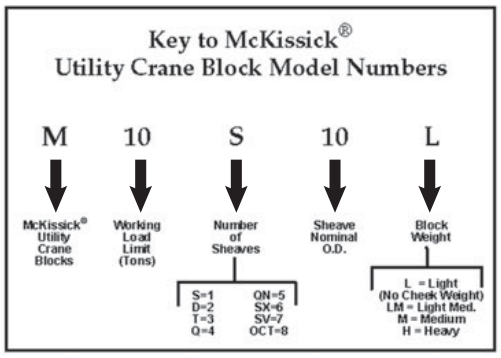

Table 1 - Standard Wireline Sizes For McKissick 380 Utility Crane Blocks

Sheave Diameter (in.)	Wireline Size (in.)									
	7/16	1/2	9/16	5/8	3/4	7/8	1	1 1/8	1 1/4	1 3/8
10	■	■	■	■						
12		■	■	■	■					
14		■	■	■	■					
16			■	■	■	■				
18				■	■	■	■			
20					■	■	■	■		
24						■	■	■	■	■
30							■	■	■	■

*For additionnal Wireline sizes, please call Crosby's Special Engineered Poducts Group at 1(800) 777-1555.

380 Series Crane Blocks

- Specify Wireline size when ordering. For standard Wireline sizes, see Table 1.
- All sizes are **RFID EQUIPPED.**
- The patented McKissick Split-Nut® is the standard retention system for standard crane blocks up to 100 tons.

Model No.	Inquiry Stock No.	Working Load Limit (Tons) †	A Overall Length (in.)	B Net Length (in.)	E Thickness (in.)	F Width (in.)	H Throat Opening with Flapper (in.)	J Hook Thickness (in.)	K Hook Width (in.)	Standard Wireline Sizes (in.)*	Dead End ‡ T Thickness (in.)	Dead End ‡ U Pin Hole (in.)	Weight Each (lbs.)
5 Tons													
M5S10L	2011004	5	31.03	24.84	5.34	14.00	1.91	2.59	1.94	7/16,1/2,9/16,5/8	1.13	1.41	140
M5S10M	2011013	5	31.03	24.84	8.53	14.00	1.91	2.59	1.94	7/16,1/2,9/16,5/8	1.13	1.41	200
M5S12L	2011022	5	32.88	26.59	5.34	16.00	1.91	2.59	1.94	1/2,9/16,5/8,3/4	1.13	1.41	142
M5S12M	2011031	5	32.88	26.59	9.84	16.00	1.91	2.59	1.94	1/2,9/16,5/8,3/4	1.13	1.41	270
M5S12H	2011036	5	32.88	26.59	13.84	16.00	1.91	2.59	1.94	1/2,9/16,5/8,3/4	1.13	1.41	400
M5D10L	2011037	5	27.44	24.84	5.34	14.00	1.91	2.59	1.94	7/16,1/2,9/16,5/8	-	-	161
M5D10M	2011038	5	27.44	24.84	8.53	14.00	1.91	2.59	1.94	7/16,1/2,9/16,5/8	-	-	223
10 Tons													
M10S10L	2011040	10	31.03	24.84	5.34	14.00	1.91	2.59	1.94	7/16,1/2,9/16,5/8	1.13	1.41	135
M10S10M	2011049	10	31.03	24.84	8.53	14.00	1.91	2.59	1.94	7/16,1/2,9/16,5/8	1.13	1.41	199
M10S12L	2011058	10	32.88	26.59	5.34	14.00	1.91	2.59	1.94	1/2,9/16,5/8,3/4	1.13	1.41	145
M10S12M	2011067	10	32.88	26.59	9.84	14.00	1.91	2.59	1.94	1/2,9/16,5/8,3/4	1.13	1.41	270
M10S12H	2011071	10	32.88	26.59	13.84	14.00	1.91	2.59	1.94	1/2,9/16,5/8,3/4	1.13	1.41	435
M10S14L	2011076	10	35.12	28.84	5.34	18.00	1.91	2.59	1.94	1/2,9/16,5/8,3/4	1.13	1.41	181
M10S14LM	2011085	10	35.12	28.84	7.34	18.00	1.91	2.59	1.94	1/2,9/16,5/8,3/4	1.13	1.41	275
M10S14M	2011094	10	35.12	28.84	10.28	18.00	1.91	2.59	1.94	1/2,9/16,5/8,3/4	1.13	1.41	360
M10S14H	2011097	10	35.12	28.84	14.72	18.00	1.91	2.59	1.94	1/2,9/16,5/8,3/4	1.13	1.41	515
M10S16L	2011098	10	37.38	31.09	5.34	20.25	1.91	2.59	1.94	9/16,5/8,3/4,7/8	1.13	1.41	220
M10S16M	2011099	10	37.38	31.09	9.72	20.25	1.91	2.59	1.94	9/16,5/8,3/4,7/8	1.13	1.41	390
M10S16H	2011100	10	37.38	31.09	12.22	20.25	1.91	2.59	1.94	9/16,5/8,3/4,7/8	1.13	1.41	540
M10D10L	2011103	10	27.44	24.84	5.34	14.00	1.91	2.59	1.94	7/16,1/2,9/16,5/8	-	-	161
M10D10M	2011112	10	27.44	24.84	8.53	14.00	1.91	2.59	1.94	7/16,1/2,9/16,5/8	-	-	220
M10D12L	2011121	10	29.19	26.59	5.34	16.00	1.91	2.59	1.94	1/2,9/16,5/8,3/4	-	-	185
M10D12M	2011130	10	29.19	26.59	9.84	16.00	1.91	2.59	1.94	1/2,9/16,5/8,3/4	-	-	295
M10D12H	2011135	10	29.19	26.59	13.84	16.00	1.91	2.59	1.94	1/2,9/16,5/8,3/4	-	-	450
M10D14L	2011136	10	31.44	28.44	5.34	18.00	1.91	2.59	1.94	1/2,9/16,5/8,3/4	-	-	210
M10D14LM	2011141	10	31.44	28.44	7.34	18.00	1.91	2.59	1.94	1/2,9/16,5/8,3/4	-	-	310
M10D14M	2011137	10	31.44	28.44	10.28	18.00	1.91	2.59	1.94	1/2,9/16,5/8,3/4	-	-	397
M10D14H	2011138	10	31.44	28.44	14.72	18.00	1.91	2.59	1.94	1/2,9/16,5/8,3/4	-	-	560
M10T10L	2011139	10	27.56	24.97	7.69	14.00	1.91	2.59	1.94	7/16,1/2,9/16,5/8	-	-	201
M10T10M	2011140	10	27.56	24.97	11.09	14.00	1.91	2.59	1.94	7/16,1/2,9/16,5/8	-	-	265
15 Tons													
M15S10L	2011148	15	31.03	24.84	5.34	14.00	1.91	2.59	1.94	7/16,1/2,9/16,5/8	1.38	1.66	137
M15S10M	2011157	15	31.03	24.84	8.53	14.00	1.91	2.59	1.94	7/16,1/2,9/16,5/8	1.38	1.66	200
M15S12L	2011166	15	32.88	26.59	5.34	16.00	1.91	2.59	1.94	1/2,9/16,5/8,3/4	1.38	1.66	145
M15S12M	2011175	15	32.88	26.59	9.84	16.00	1.91	2.59	1.94	1/2,9/16,5/8,3/4	1.38	1.66	295
M15S12H	2011179	15	32.88	26.59	13.84	16.00	1.91	2.59	1.94	1/2,9/16,5/8,3/4	1.38	1.66	435
M15S14L	2011184	15	35.12	28.84	5.34	18.00	1.91	2.59	1.94	1/2,9/16,5/8,3/4	1.38	1.66	190
M15S14LM	2011185	15	35.12	28.84	7.34	18.00	1.91	2.59	1.94	1/2,9/16,5/8,3/4	1.38	1.66	290
M15S14M	2011193	15	35.12	28.84	10.28	18.00	1.91	2.59	1.94	1/2,9/16,5/8,3/4	1.38	1.66	370
M15S14H	2011198	15	35.12	28.84	14.72	18.00	1.91	2.59	1.94	1/2,9/16,5/8,3/4	1.38	1.66	545
M15S16L	2011202	15	37.38	31.09	5.34	20.25	1.91	2.59	1.94	9/16,5/8,3/4,7/8	1.38	1.66	240
M15S16M	2011211	15	37.38	31.09	9.72	20.25	1.91	2.59	1.94	9/16,5/8,3/4,7/8	1.38	1.66	390
M15S16H	2011215	15	37.38	31.09	12.22	20.25	1.91	2.59	1.94	9/16,5/8,3/4,7/8	1.38	1.66	540
M15D10L	2011220	15	27.43	24.84	5.34	14.00	1.91	2.59	1.94	7/16,1/2,9/16,5/8	—	—	161
M15D10M	2011229	15	27.43	24.84	8.53	14.00	1.91	2.59	1.94	7/16,1/2,9/16,5/8	—	—	220

Copyright © 2016 The Crosby Group LLC All Rights Reserved

McKissick® 380 Series Crane Blocks

380 Series Crane Blocks

Model No.	Inquiry Stock No.	Working Load Limit (Tons) †	A Overall Length (in.)	B Net Length (in.)	E Thickness (in.)	F Width (in.)	H Throat Opening with Flapper (in.)	J Hook Thickness (in.)	K Hook Width (in.)	Standard Wireline Sizes (in.)*	Dead End ‡ T Thickness (in.)	Dead End ‡ U Pin Hole (in.)	Weight Each (lbs.)
M15D12L	2011233	15	29.19	26.59	5.34	16.00	1.91	2.59	1.94	1/2,9/16,5/8,3/4	—	—	195
M15D12M	2011238	15	29.19	26.59	9.84	16.00	1.91	2.59	1.94	1/2,9/16,5/8,3/4	—	—	295
M15D12H	2011243	15	29.19	26.59	13.84	16.00	1.91	2.59	1.94	1/2,9/16,5/8,3/4	—	—	450
M15D14L	2011256	15	31.44	28.84	5.34	18.00	1.91	2.59	1.94	1/2,9/16,5/8,3/4	—	—	210
M15D14LM	2011257	15	31.44	28.84	7.34	18.00	1.91	2.59	1.94	1/2,9/16,5/8,3/4	—	—	310
M15D14M	2011265	15	31.44	28.84	10.28	18.00	1.91	2.59	1.94	1/2,9/16,5/8,3/4	—		397
M15D14H	2011269	15	31.44	28.84	14.72	18.00	1.91	2.59	1.94	1/2,9/16,5/8,3/4	—	—	560
M15D16L	2011270	15	33.69	31.09	5.34	20.25	1.91	2.59	1.94	9/16,5/8,3/4,7/8	—	—	299
M15D16M	2011271	15	33.69	31.09	9.72	20.25	1.91	2.59	1.94	9/16,5/8,3/4,7/8	—	—	465
M15D16H	2011272	15	33.69	31.09	12.22	20.25	1.91	2.59	1.94	9/16,5/8,3/4,7/8	—	—	610
M15T10L	2011273	15	27.56	24.97	7.69	14.00	1.91	2.59	1.94	7/16,1/2,9/16,5/8	—	—	201
M15T10M	2011274	15	27.56	24.97	11.09	14.00	1.91	2.59	1.94	7/16,1/2,9/16,5/8	—	—	265
M15T12L	2011275	15	29.31	26.75	7.69	16.00	1.91	2.59	1.94	1/2,9/16,5/8,3/4	—	—	215
M15T12M	2011283	15	29.31	26.75	12.19	16.00	1.91	2.59	1.94	1/2,9/16,5/8,3/4	—	—	340
M15T12H	2011285	15	29.31	26.75	16.19	16.00	1.91	2.59	1.94	1/2,9/16,5/8,3/4	—	—	496
M15Q10L	2011287	15	27.50	24.91	9.94	14.00	1.91	2.59	1.94	7/16,1/2,9/16,5/8	—	—	258
M15Q10M	2011288	15	27.50	24.91	13.12	14.00	1.91	2.59	1.94	7/16,1/2,9/16,5/8	—	—	320
20 Tons													
M20S12L	2011289	20	34.82	28.12	5.84	16.00	2.75	2.97	2.38	1/2,9/16,5/8,3/4	1.38	1.66	200
M20S12M	2011290	20	34.82	28.12	10.34	16.00	2.75	2.97	2.38	1/2,9/16,5/8,3/4	1.38	1.66	310
M20S12H	2011291	20	34.82	28.12	14.34	16.00	2.75	2.97	2.38	1/2,9/16,5/8,3/4	1.38	1.66	470
M20S14L	2011301	20	37.06	30.38	5.84	18.00	2.75	2.97	2.38	1/2,9/16,5/8,3/4	1.38	1.66	240
M20S14LM	2011302	20	37.06	30.38	7.84	18.00	2.75	2.97	2.38	1/2,9/16,5/8,3/4	1.38	1.66	355
M20S14M	2011310	20	37.06	30.38	10.78	18.00	2.75	2.97	2.38	1/2,9/16,5/8,3/4	1.38	1.66	410
M20S14H	2011314	20	37.06	30.38	15.22	18.00	2.75	2.97	2.38	1/2,9/16,5/8,3/4	1.38	1.66	580
M20S16L	2011315	20	39.31	32.63	5.84	20.25	2.75	2.97	2.38	9/16,5/8,3/4,7/8	1.38	1.66	280
M20S16M	2011316	20	39.31	32.63	10.19	20.25	2.75	2.97	2.38	9/16,5/8,3/4,7/8	1.38	1.66	445
M20S16H	2011317	20	39.31	32.63	12.69	20.25	2.75	2.97	2.38	9/16,5/8,3/4,7/8	1.38	1.66	600
M20S18L	2011319	20	44.28	36.56	6.84	22.75	2.75	2.97	2.38	5/8,3/4,7/8,1	1.53	2.06	400
M20S18M	2011328	20	44.28	36.56	10.97	22.75	2.75	2.97	2.38	5/8,3/4,7/8,1	1.53	2.06	620
M20S18H	2011333	20	44.28	36.56	12.97	22.75	2.75	2.97	2.38	5/8,3/4,7/8,1	1.53	2.06	760
M20S24L	2011330	20	50.19	42.44	6.84	28.75	2.75	2.97	2.38	7/8,1,1-1/8,1-1/4	1.38	1.66	545
M20S24M	2011331	20	50.19	42.44	14.59	28.75	2.75	2.97	2.38	7/8,1,1-1/8,1-1/4	1.38	1.66	1177
M20S24H	2011332	20	50.19	42.44	18.59	28.75	2.75	2.97	2.38	7/8,1,1-1/8,1-1/4	1.38	1.66	1660
M20D10L	2011335	20	29.38	26.38	5.84	14.00	2.75	2.97	2.38	7/16,1/2,9/16,5/8	—	—	200
M20D10M	2011337	20	29.38	26.38	9.03	14.00	2.75	2.97	2.38	7/16,1/2,9/16,5/8	—	—	260
M20D12L	2011346	20	31.12	28.12	5.84	16.00	2.75	2.97	2.38	1/2,9/16,5/8,3/4	—	—	228
M20D12M	2011355	20	31.12	28.12	10.34	16.00	2.75	2.97	2.38	1/2,9/16,5/8,3/4	—	—	340
M20D12H	2011364	20	31.12	28.12	14.34	16.00	2.75	2.97	2.38	1/2,9/16,5/8,3/4	—	—	505
M20D14L	2011373	20	33.38	30.38	5.84	18.00	2.75	2.97	2.38	1/2,9/16,5/8,3/4	—	—	280
M20D14LM	2011374	20	33.38	30.38	7.84	18.00	2.75	2.97	2.38	1/2,9/16,5/8,3/4	—	—	380
M20D14M	2011375	20	33.38	30.38	10.78	18.00	2.75	2.97	2.38	1/2,9/16,5/8,3/4	—	—	465
M20D14H	2011377	20	33.38	30.38	15.22	18.00	2.75	2.97	2.38	1/2,9/16,5/8,3/4	—	—	620
M20D16L	2011378	20	35.62	32.62	5.84	20.25	2.75	2.97	2.38	9/16,5/8,3/4,7/8	—	—	325
M20D16M	2011379	20	35.62	32.62	10.22	20.25	2.75	2.97	2.38	9/16,5/8,3/4,7/8	—	—	480
M20D16H	2011380	20	35.62	32.62	12.72	20.25	2.75	2.97	2.38	9/16,5/8,3/4,7/8	—	—	635
M20T10L	2011381	20	29.50	26.5	8.19	14.00	2.75	2.97	2.38	7/16,1/2,9/16,5/8	—	—	238
M20T10M	2011382	20	29.50	26.5	11.38	14.00	2.75	2.97	2.38	7/16,1/2,9/16,5/8	—	—	300
M20T12L	2011391	20	31.25	28.25	8.19	16.00	2.75	2.97	2.38	1/2,9/16,5/8,3/4	—	—	266
M20T12M	2011400	20	31.25	28.25	12.66	16.00	2.75	2.97	2.38	1/2,9/16,5/8,3/4	—	—	390
M20T12H	2011409	20	31.25	28.25	16.69	16.00	2.75	2.97	2.38	1/2,9/16,5/8,3/4	—	—	555
M20T14L	2011418	20	33.50	30.50	8.19	18.00	2.75	2.97	2.38	1/2,9/16,5/8,3/4	—	—	335
M20T14LM	2011420	20	33.50	30.50	10.19	18.00	2.75	2.97	2.38	1/2,9/16,5/8,3/4	—	—	430
M20T14M	2011427	20	33.50	30.50	13.06	18.00	2.75	2.97	2.38	1/2,9/16,5/8,3/4	—	—	520
M20T14H	2011432	20	33.50	30.50	17.50	18.00	2.75	2.97	2.38	1/2,9/16,5/8,3/4	—	—	675
M20Q10L	2011433	20	29.44	26.44	10.44	14.00	2.75	2.97	2.38	7/16,1/2,9/16,5/8	—	—	310
M20Q10M	2011434	20	29.44	26.44	13.62	14.00	2.75	2.97	2.38	7/16,1/2,9/16,5/8	—	—	360
M20Q12L	2011435	20	31.19	28.19	10.44	16.00	2.75	2.97	2.38	1/2,9/16,5/8,3/4	—	—	335
M20Q12M	2011436	20	31.19	28.19	14.94	16.00	2.75	2.97	2.38	1/2,9/16,5/8,3/4	—	—	490
M20Q12H	2011437	20	31.19	28.19	18.94	16.00	2.75	2.97	2.38	1/2,9/16,5/8,3/4	—	—	620
25 Tons @ - Ultimate Load is 3.6 times the Working Load Limit													
M25S14L	2011441	25@	37.06	30.38	5.84	18.00	2.75	2.97	2.38	1/2,9/16,5/8,3/4	1.38	1.66	240
M25S14LM	2011443	25@	37.06	30.38	7.84	18.00	2.75	2.97	2.38	1/2,9/16,5/8,3/4	1.38	1.66	350
M25S14M	2011445	25@	37.06	30.38	10.78	18.00	2.75	2.97	2.38	1/2,9/16,5/8,3/4	1.38	1.66	415
M25S14H	2011448	25@	37.06	30.38	15.22	18.00	2.75	2.97	2.38	1/2,9/16,5/8,3/4	1.38	1.66	560
M25S16L	2011451	25@	39.31	32.62	5.84	20.25	2.75	2.97	2.38	9/16,5/8,3/4,7/8	1.50	1.66	280
M25S16M	2011454	25@	39.31	32.62	10.22	20.25	2.75	2.97	2.38	9/16,5/8,3/4,7/8	1.50	1.66	445
M25S16H	2011457	25@	39.31	32.62	12.72	20.25	2.75	2.97	2.38	9/16,5/8,3/4,7/8	1.50	1.66	590
M25S18L	2011461	25@	44.28	36.56	6.84	22.75	2.75	2.97	2.38	5/8,3/4,7/8,1	1.53	2.06	390
M25S18M	2011463	25@	44.28	36.56	10.97	22.75	2.75	2.97	2.38	5/8,3/4,7/8,1	1.53	2.06	620

Copyright © 2016 The Crosby Group LLC All Rights Reserved

380 Series Crane Blocks

Model No.	Inquiry Stock No.	Working Load Limit (Tons) †	A Overall Length (in.)	B Net Length (in.)	E Thickness (in.)	F Width (in.)	H Throat Opening with Flapper (in.)	J Hook Thickness (in.)	K Hook Width (in.)	Standard Wireline Sizes (in.)*	Dead End ‡ T Thickness (in.)	Dead End ‡ U Pin Hole (in.)	Weight Each (lbs.)
M25S18H	2011467	25@	44.28	36.56	12.97	22.75	2.75	2.97	2.38	5/8,3/4,7/8,1	1.53	2.06	760
M25S20L	2011458	25@	46.19	38.44	6.84	24.75	2.75	2.97	2.38	3/4,7/8,1,1-1/8	1.50	2.06	435
M25S20M	2011459	25@	46.19	38.44	11.34	24.75	2.75	2.97	2.38	3/4,7/8,1,1-1/8	1.50	2.06	655
M25S20H	2011460	25@	46.19	38.44	15.34	24.75	2.75	2.97	2.38	3/4,7/8,1,1-1/8	1.50	2.06	803
M25S24L	2011464	25@	50.19	42.44	6.84	28.75	2.75	2.97	2.38	7/8,1,1-1/8,1-1/4	1.50	2.06	545
M25S24M	2011465	25@	50.19	42.44	14.59	28.75	2.75	2.97	2.38	7/8,1,1-1/8,1-1/4	1.50	2.06	1180
M25S24H	2011466	25@	50.19	42.44	18.59	28.75	2.75	2.97	2.38	7/8,1,1-1/8,1-1/4	1.50	2.06	1660
M25D12L	2011468	25@	31.12	28.12	5.84	16.00	2.75	2.97	2.38	1/2,9/16,5/8,3/4	—	—	228
M25D12M	2011469	25@	31.12	28.12	10.34	16.00	2.75	2.97	2.38	1/2,9/16,5/8,3/4	—	—	340
M25D12H	2011470	25@	31.12	28.12	14.34	16.00	2.75	2.97	2.38	1/2,9/16,5/8,3/4	—	—	505
M25D14L	2011472	25@	33.38	30.38	5.84	18.00	2.75	2.97	2.38	1/2,9/16,5/8,3/4	—	—	280
M25D14LM	2011481	25@	33.38	30.38	7.75	18.00	2.75	2.97	2.38	1/2,9/16,5/8,3/4	—	—	350
M25D14M	2011490	25@	33.38	30.38	10.78	18.00	2.75	2.97	2.38	1/2,9/16,5/8,3/4	—	—	465
M25D14H	2011495	25@	33.38	30.38	15.22	18.00	2.75	2.97	2.38	1/2,9/16,5/8,3/4	—	—	610
M25D16L	2011499	25@	35.63	32.62	5.84	20.25	2.75	2.97	2.38	9/16,5/8,3/4,7/8	—	—	325
M25D16M	2011508	25@	35.63	32.62	10.22	20.25	2.75	2.97	2.38	9/16,5/8,3/4,7/8	—	—	480
M25D16H	2011512	25@	35.63	32.62	12.72	20.25	2.75	2.97	2.38	9/16,5/8,3/4,7/8	—	—	635
M25D18L	2011576	25@	39.50	36.50	6.84	22.75	2.75	2.97	2.38	5/8,3/4,7/8,1	—	—	470
M25D18M	2011579	25@	39.50	36.50	10.97	22.75	2.75	2.97	2.38	5/8,3/4,7/8,1	—	—	705
M25D18H	2011581	25@	39.50	36.50	12.97	22.75	2.75	2.97	2.38	5/8,3/4,7/8,1	—	—	840
M25T10L	2011514	25@	29.50	26.50	8.19	14.00	2.75	2.97	2.38	7/16,1/2,9/16,5/8	—	—	238
M25T10M	2011515	25@	29.50	26.50	11.38	14.00	2.75	2.97	2.38	7/16,1/2,9/16,5/8	—	—	300
M25T12L	2011517	25@	31.25	28.25	8.19	16.00	2.75	2.97	2.38	1/2,9/16,5/8,3/4	—	—	266
M25T12M	2011526	25@	31.25	28.25	12.66	16.00	2.75	2.97	2.38	1/2,9/16,5/8,3/4	—	—	390
M25T12H	2011531	25@	31.25	28.25	16.69	16.00	2.75	2.97	2.38	1/2,9/16,5/8,3/4	—	—	540
M25T14L	2011535	25@	33.50	30.50	8.19	18.00	2.75	2.97	2.38	1/2,9/16,5/8,3/4	—	—	335
M25T14LM	2011540	25@	33.50	30.50	10.19	18.00	2.75	2.97	2.38	1/2,9/16,5/8,3/4	—	—	495
M25T14M	2011544	25@	33.50	30.50	13.06	18.00	2.75	2.97	2.38	1/2,9/16,5/8,3/4	—	—	520
M25T14H	2011553	25@	33.50	30.50	17.5	18.00	2.75	2.97	2.38	1/2,9/16,5/8,3/4	—	—	675
M25T16L	2011562	25@	35.75	32.75	8.19	20.25	2.75	2.97	2.38	9/16,5/8,3/4,7/8	—	—	389
M25T16M	2011571	25@	35.75	32.75	12.53	20.25	2.75	2.97	2.38	9/16,5/8,3/4,7/8	—	—	555
M25T16H	2011575	25@	35.75	32.75	15.03	20.25	2.75	2.97	2.38	9/16,5/8,3/4,7/8	—	—	700
M25T18L	2011578	25@	39.53	36.56	9.91	22.75	2.75	2.97	2.38	5/8,3/4,7/8,1	—	—	585
M25T18M	2011580	25@	39.53	36.56	14.03	22.75	2.75	2.97	2.38	5/8,3/4,7/8,1	—	—	805
M25T18H	2011587	25@	39.53	36.56	16.03	22.75	2.75	2.97	2.38	5/8,3/4,7/8,1	—	—	939
M25Q10L	2011588	25@	29.44	26.44	10.44	14.00	2.75	2.97	2.38	7/16,1/2,9/16,5/8	—	—	310
M25Q10M	2011589	25@	29.44	26.44	13.62	14.00	2.75	2.97	2.38	7/16,1/2,9/16,5/8	—	—	370
M25Q12L	2011590	25@	31.19	28.19	10.44	16.00	2.75	2.97	2.38	1/2,9/16,5/8,3/4	—	—	335
M25Q12M	2011591	25@	31.19	28.19	14.94	16.00	2.75	2.97	2.38	1/2,9/16,5/8,3/4	—	—	455
M25Q12H	2011592	25@	31.19	28.19	18.94	16.00	2.75	2.97	2.38	1/2,9/16,5/8,3/4	—	—	620
M25Q14L	2011593	25@	33.44	30.44	10.44	18.00	2.75	2.97	2.38	1/2,9/16,5/8,3/4	—	—	426
M25Q14LM	2011596	25@	33.44	30.44	12.44	18.00	2.75	2.97	2.38	1/2,9/16,5/8,3/4	—	—	485
M25Q14H	2011594	25@	33.44	30.44	15.38	18.00	2.75	2.97	2.38	1/2,9/16,5/8,3/4	—	—	602
M25Q14M	2011595	25@	33.44	30.44	19.81	18.00	2.75	2.97	2.38	1/2,9/16,5/8,3/4	—	—	750
30 Tons													
M30S16L	2011598	30	43.41	36.09	5.84	20.25	3.25	3.62	3.00	9/16,5/8, 3/4,7/8	1.50	1.66	305
M30S16M	2011607	30	43.41	36.09	10.22	20.25	3.25	3.62	3.00	9/16,5/8, 3/4,7/8	1.50	1.66	465
M30S16H	2011613	30	43.41	36.09	12.72	20.25	3.25	3.62	3.00	9/16,5/8, 3/4,7/8	1.50	1.66	620
M30S18L	2011616	30	46.00	37.59	6.84	22.75	3.25	3.62	3.00	5/8,3/4, 7/8, 1	1.53	2.06	420
M30S18M	2011625	30	46.00	37.59	10.97	22.75	3.25	3.62	3.00	5/8,3/4, 7/8, 1	1.53	2.06	640
M30S18H	2011629	30	46.00	37.59	12.96	22.75	3.25	3.62	3.00	5/8,3/4, 7/8, 1	1.53	2.06	774
M30S20L	2011631	30	49.5	41.09	6.84	24.75	3.25	3.62	3.00	3/4,7/8, 1,1-1/8	1.50	2.06	468
M30S20M	2011634	30	49.5	41.09	11.34	24.75	3.25	3.62	3.00	3/4,7/8, 1,1-1/8	1.50	2.06	765
M30S20H	2011638	30	49.5	41.09	15.34	24.75	3.25	3.62	3.00	3/4,7/8, 1,1-1/8	1.50	2.06	1120
M30S24L	2011639	30	53.5	45.09	6.84	28.75	3.25	3.62	3.00	7/8,1,1-1/8,1-1/4	1.50	2.06	740
M30S24M	2011640	30	53.5	45.09	14.59	28.75	3.25	3.62	3.00	7/8,1,1-1/8,1-1/4	1.50	2.06	1410
M30S24H	2011641	30	53.5	45.09	18.59	28.75	3.25	3.62	3.00	7/8,1,1-1/8,1-1/4	1.50	2.06	1890
M30D14L	2011643	30	37.47	33.84	5.84	18.00	3.25	3.62	3.00	1/2,9/16, 5/8,3/4	—	—	298
M30D14LM	2011659	30	37.47	33.84	7.84	18.00	3.25	3.62	3.00	1/2,9/16, 5/8,3/4	—	—	380
M30D14M	2011652	30	37.47	33.84	10.78	18.00	3.25	3.62	3.00	1/2,9/16, 5/8,3/4	—	—	480
M30D14H	2011658	30	37.47	33.84	15.22	18.00	3.25	3.62	3.00	1/2,9/16, 5/8,3/4	—	—	646
M30D16L	2011661	30	39.72	36.09	5.84	20.25	3.25	3.62	3.00	9/16,5/8, 3/4,7/8	—	—	350
M30D16M	2011670	30	39.72	36.09	10.22	20.25	3.25	3.62	3.00	9/16,5/8, 3/4,7/8	—	—	508
M30D16H	2011672	30	39.72	36.09	12.72	20.25	3.25	3.62	3.00	9/16,5/8, 3/4,7/8	—	—	654
M30D18L	2011675	30	41.25	37.59	6.84	22.75	3.25	3.62	3.00	5/8,3/4, 7/8, 1	—	—	490
M30D18M	2011676	30	41.25	37.59	10.97	22.75	3.25	3.62	3.00	5/8,3/4, 7/8, 1	—	—	710
M30D18H	2011677	30	41.25	37.59	12.96	22.75	3.25	3.62	3.00	5/8,3/4, 7/8, 1	—	—	844
M30T12L	2011679	30	35.25	31.59	8.19	16.00	3.25	3.62	3.00	1/2,9/16, 5/8,3/4	—	—	320
M30T12M	2011680	30	35.25	31.59	12.66	16.00	3.25	3.62	3.00	1/2,9/16, 5/8,3/4	—	—	444
M30T12H	2011681	30	35.25	31.59	16.69	16.00	3.25	3.62	3.00	1/2,9/16, 5/8,3/4	—	—	595

Copyright © 2016 The Crosby Group LLC All Rights Reserved

McKissick® 380 Series Crane Blocks

380 Series Crane Blocks

Model No.	Inquiry Stock No.	Working Load Limit (Tons) †	A Overall Length (in.)	B Net Length (in.)	E Thickness (in.)	F Width (in.)	H Throat Opening with Flapper (in.)	J Hook Thickness (in.)	K Hook Width (in.)	Standard Wireline Sizes (in.)*	Dead End ‡ T Thickness (in.)	Dead End ‡ U Pin Hole (in.)	Weight Each (lbs.)
M30T14L	2011688	30	37.50	33.84	8.19	18.00	3.25	3.62	3.00	1/2,9/16, 5/8,3/4	—	—	390
M30T14LM	2011703	30	37.50	33.84	10.12	18.00	3.25	3.62	3.00	1/2, 9/16, 5/8, 3/4	—	—	480
M30T14M	2011697	30	37.50	33.84	13.06	18.00	3.25	3.62	3.00	1/2, 9/16, 5/8, 3/4	—	—	575
M30T14H	2011702	30	37.50	33.84	17.50	18.00	3.25	3.62	3.00	1/2, 9/16, 5/8, 3/4	—	—	743
M30T16L	2011706	30	39.75	36.09	8.19	20.25	3.25	3.62	3.00	9/16, 5/8, 3/4, 7/8	—	—	454
M30T16M	2011708	30	39.75	36.09	12.53	20.25	3.25	3.62	3.00	9/16, 5/8, 3/4, 7/8	—	—	610
M30T16H	2011710	30	39.75	36.09	15.03	20.25	3.25	3.62	3.00	9/16, 5/8, 3/4, 7/8	—	—	755
M30T18L	2011712	30	41.25	37.59	9.91	22.75	3.25	3.62	3.00	5/8, 3/4, 7/8, 1	—	—	620
M30T18M	2011715	30	41.25	37.59	14.03	22.75	3.25	3.62	3.00	5/8, 3/4, 7/8, 1	—	—	855
M30T18H	2011719	30	41.25	37.59	16.03	22.75	3.25	3.62	3.00	5/8, 3/4, 7/8, 1	—	—	989
M30T20L	2011742	30	43.25	39.59	9.91	24.75	3.25	3.62	3.00	3/4, 7/8, 1, 1-1/8	—	—	688
M30T20M	2011743	30	43.25	39.59	14.41	24.75	3.25	3.62	3.00	3/4, 7/8, 1, 1-1/8	—	—	990
M30T20H	2011744	30	43.25	39.59	18.41	24.75	3.25	3.62	3.00	3/4, 7/8, 1, 1-1/8	—	—	1340
M30Q10L	2011714	30	33.50	29.84	10.44	14.00	3.25	3.62	3.00	7/16, 1/2, 9/16, 5/8	—	—	350
M30Q10M	2011716	30	33.50	29.84	13.62	14.00	3.25	3.62	3.00	7/16, 1/2, 9/16, 5/8	—	—	405
M30Q12L	2011717	30	35.25	31.59	10.44	16.00	3.25	3.62	3.00	1/2, 9/16, 5/8, 3/4	—	—	370
M30Q12M	2011718	30	35.25	31.59	14.94	16.00	3.25	3.62	3.00	1/2, 9/16, 5/8, 3/4	—	—	496
M30Q12H	2011720	30	35.25	31.59	18.94	16.00	3.25	3.62	3.00	1/2, 9/16, 5/8, 3/4	—	—	655
M30Q14L	2011724	30	37.50	33.84	10.44	18.00	3.25	3.62	3.00	1/2, 9/16, 5/8, 3/4	—	—	455
M30Q14LM	2011741	30	37.50	33.84	12.44	18.00	3.25	3.62	3.00	1/2, 9/16, 5/8, 3/4	—	—	520
M30Q14M	2011733	30	37.50	33.84	15.44	18.00	3.25	3.62	3.00	1/2, 9/16, 5/8, 3/4	—	—	640
M30Q14H	2011737	30	37.50	33.84	19.88	18.00	3.25	3.62	3.00	1/2, 9/16, 5/8, 3/4	—	—	798
M30Q16L	2011738	30	39.75	36.09	10.44	20.25	3.25	3.62	3.00	9/16, 5/8, 3/4, 7/8	—	—	430
M30Q16M	2011739	30	39.75	36.09	14.88	20.25	3.25	3.62	3.00	9/16, 5/8, 3/4, 7/8	—	—	585
M30Q16H	2011740	30	39.75	36.09	17.38	20.25	3.25	3.62	3.00	9/16, 5/8, 3/4, 7/8	—	—	731
35 Tons													
M35S18L	2011745	35	50.00	40.69	6.84	22.75	3.00	4.56	3.62	5/8, 3/4, 7/8, 1	1.50	2.06	485
M35S18M	2011746	35	50.00	40.69	10.97	22.75	3.00	4.56	3.62	5/8, 3/4, 7/8, 1	1.50	2.06	731
M35S18H	2011747	35	50.00	40.69	12.97	22.75	3.00	4.56	3.62	5/8, 3/4, 7/8, 1	1.50	2.06	865
M35S20L	2011748	35	53.50	44.19	6.84	24.75	3.00	4.56	3.62	3/4, 7/8, 1, 1-1/8	1.50	2.06	539
M35S20M	2011751	35	53.50	44.49	11.34	24.75	3.00	4.56	3.62	3/4, 7/8, 1, 1-1/8	1.50	2.06	835
M35S20H	2011755	35	53.50	44.19	15.34	24.75	3.00	4.56	3.62	3/4, 7/8, 1, 1-1/8	1.50	2.06	1181
M35S24L	2011752	35	57.50	48.19	6.84	28.75	3.00	4.56	3.62	7/8, 1, 1-1/8, 1-1/4	1.50	2.06	740
M35S24M	2011753	35	57.50	48.19	14.59	28.75	3.00	4.56	3.62	7/8, 1, 1-1/8, 1-1/4	1.50	2.06	1410
M35S24H	2011754	35	57.50	48.19	18.59	28.75	3.00	4.56	3.62	7/8, 1, 1-1/8, 1-1/4	1.50	2.06	1890
M35D16L	2011756	35	43.75	39.19	6.84	20.25	3.00	4.56	3.62	9/16, 5/8, 3/4, 7/8	—	—	430
M35D16M	2011757	35	43.75	39.19	11.22	20.25	3.00	4.56	3.62	9/16, 5/8, 3/4, 7/8	—	—	585
M35D16H	2011758	35	43.75	39.19	13.72	20.25	3.00	4.56	3.62	9/16, 5/8, 3/4, 7/8	—	—	731
M35D18L	2011760	35	41.22	37.59	9.91	22.75	3.00	4.56	3.62	5/8, 3/4, 7/8, 1	—	—	560
M35D18M	2011769	35	41.22	37.59	14.03	22.75	3.00	4.56	3.62	5/8, 3/4, 7/8, 1	—	—	805
M35D18H	2011774	35	41.22	37.59	16.03	22.75	3.00	4.56	3.62	5/8, 3/4, 7/8, 1	—	—	934
M35T14L	2011778	35	41.56	36.94	8.19	18.00	3.00	4.56	3.62	1/2, 9/16, 5/8, 3/4	—	—	450
M35T14LM	2011792	35	41.56	36.94	10.19	18.00	3.00	4.56	3.62	1/2, 9/16, 5/8, 3/4	—	—	540
M35T14M	2011787	35	41.56	36.94	13.06	18.00	3.00	4.56	3.62	1/2, 9/16, 5/8, 3/4	—	—	630
M35T14H	2011793	35	41.56	36.94	17.50	18.00	3.00	4.56	3.62	1/2, 9/16, 5/8, 3/4	—	—	788
M35T16L	2011794	35	43.81	39.19	8.19	20.25	3.00	4.56	3.62	9/16, 5/8, 3/4, 7/8	—	—	500
M35T16M	2011795	35	43.81	39.19	12.53	20.25	3.00	4.56	3.62	9/16, 5/8, 3/4, 7/8	—	—	667
M35T16H	2011796	35	43.81	39.19	15.03	20.25	3.00	4.56	3.62	9/16, 5/8, 3/4, 7/8	—	—	805
M35T18L	2011797	35	45.25	40.69	9.91	22.75	3.00	4.56	3.62	5/8, 3/4, 7/8, 1	—	—	680
M35T18M	2011799	35	45.25	40.69	14.03	22.75	3.00	4.56	3.62	5/8, 3/4, 7/8, 1	—	—	899
M35T18H	2011802	35	45.25	40.69	16.03	22.75	3.00	4.56	3.62	5/8, 3/4, 7/8, 1	—	—	1035
M35T20L	2011798	35	48.75	44.19	9.91	24.75	3.00	4.56	3.62	3/4, 7/8, 1, 1-1/8	—	—	745
M35T20M	2011800	35	48.75	44.19	14.41	24.75	3.00	4.56	3.62	3/4, 7/8, 1, 1-1/8	—	—	1056
M35T20H	2011801	35	48.75	44.19	18.41	24.75	3.00	4.56	3.62	3/4, 7/8, 1, 1-1/8	—	—	1400
M35Q12L	2011803	35	39.31	34.69	10.44	16.00	3.00	4.56	3.62	1/2, 9/16, 5/8, 3/4	—	—	438
M35Q12M	2011804	35	39.31	34.69	14.94	16.00	3.00	4.56	3.62	1/2, 9/16, 5/8, 3/4	—	—	555
M35Q12H	2011805	35	39.31	34.69	18.94	16.00	3.00	4.56	3.62	1/2, 9/16, 5/8, 3/4	—	—	710
M35Q14L	2011806	35	41.56	36.94	10.44	18.00	3.00	4.56	3.62	1/2, 9/16, 5/8, 3/4	—	—	455
M35Q14LM	2011807	35	41.56	36.94	12.44	18.00	3.00	4.56	3.62	1/2, 9/16, 5/8, 3/4	—	—	520
M35Q14M	2011814	35	41.56	36.94	15.44	18.00	3.00	4.56	3.62	1/2, 9/16, 5/8, 3/4	—	—	648
M35Q14H	2011817	35	41.56	36.94	19.88	18.00	3.00	4.56	3.62	1/2, 9/16, 5/8, 3/4	—	—	815
M35Q16L	2011818	35	43.81	39.19	10.44	20.25	3.00	4.56	3.62	9/16, 5/8, 3/4, 7/8	—	—	584
M35Q16M	2011819	35	43.81	39.19	14.88	20.25	3.00	4.56	3.62	9/16, 5/8, 3/4, 7/8	—	—	750
M35Q16H	2011820	35	43.81	39.19	17.38	20.25	3.00	4.56	3.62	9/16, 5/8, 3/4, 7/8	—	—	890
M35QN14L	2011815	35	45.00	36.94	13.25	18.00	3.00	4.56	3.62	1/2, 9/16, 5/8, 3/4	1.25	1.41	530
M35QN14LM	2011808	35	45.00	36.94	15.25	18.00	3.00	4.56	3.62	1/2, 9/16, 5/8, 3/4	1.25	1.41	620
M35QN14M	2011809	35	45.00	36.94	18.25	18.00	3.00	4.56	3.62	1/2, 9/16, 5/8, 3/4	1.25	1.41	810
M35QN14H	2011810	35	45.00	36.94	19.69	18.00	3.00	4.56	3.62	1/2, 9/16, 5/8, 3/4	1.25	1.41	960
40 Tons													
M40S20L	2011833	40	55.81	46.00	7.81	24.75	3.00	4.56	3.62	3/4, 7/8, 1, 1-1/8	1.75	2.28	660

Copyright © 2016 The Crosby Group LLC All Rights Reserved

380 Series Crane Blocks

Model No.	Inquiry Stock No.	Working Load Limit (Tons) †	A Overall Length (in.)	B Net Length (in.)	E Thickness (in.)	F Width (in.)	H Throat Opening with Flapper (in.)	J Hook Thickness (in.)	K Hook Width (in.)	Standard Wireline Sizes (in.)*	Dead End ‡ T Thickness (in.)	Dead End ‡ U Pin Hole (in.)	Weight Each (lbs.)
M40S20M	2011834	40	55.81	46.00	12.31	24.75	3.00	4.56	3.62	3/4, 7/8, 1, 1-1/8	1.75	2.28	955
M40S20H	2011835	40	55.81	46.00	16.31	24.75	3.38	5.06	3.72	3/4, 7/8, 1, 1-1/8	1.75	2.28	1299
M40S24L	2011825	40	59.81	50.00	7.81	28.75	3.38	5.06	3.72	7/8, 1, 1-1/8, 1-1/4	1.75	2.28	790
M40S24M	2011829	40	59.81	50.00	15.56	28.75	3.38	5.06	3.72	7/8, 1, 1-1/8, 1-1/4	1.75	2.28	1480
M40S24H	2011832	40	59.81	50.00	19.56	28.75	3.38	5.06	3.72	7/8, 1, 1-1/8, 1-1/4	1.75	2.28	1940
M40D18L	2011918	40	47.56	42.50	7.81	22.75	3.38	5.06	3.72	5/8, 3/4, 7/8, 1	—	—	685
M40D18M	2011919	40	47.56	42.50	11.94	22.75	3.38	5.06	3.72	5/8, 3/4, 7/8, 1	—	—	926
M40D18H	2011920	40	47.56	42.50	13.94	22.75	3.38	5.06	3.72	5/8, 3/4, 7/8, 1	—	—	1073
M40D20L	2011841	40	50.06	45.00	7.81	24.75	3.38	5.06	3.72	3/4, 7/8, 1, 1-1/8	—	—	759
M40D20M	2011850	40	50.06	45.00	12.31	24.75	3.38	5.06	3.72	3/4, 7/8, 1, 1-1/8	—	—	1090
M40D20H	2011854	40	50.06	45.00	16.31	24.75	3.38	5.06	3.72	3/4, 7/8, 1, 1-1/8	—	—	1401
M40T14L	2011855	40	43.44	38.38	8.19	18.00	3.38	5.06	3.72	1/2, 9/16, 5/8, 3/4	—	—	519
M40T14M	2011856	40	43.44	38.38	13.06	18.00	3.38	5.06	3.72	1/2, 9/16, 5/8, 3/4	—	—	695
M40T14H	2011857	40	43.44	38.38	17.50	18.00	3.38	5.06	3.72	1/2, 9/16, 5/8, 3/4	—	—	843
M40T16L	2011859	40	45.69	40.62	8.19	20.25	3.38	5.06	3.72	9/16, 5/8, 3/4, 7/8	—	—	525
M40T16M	2011868	40	45.69	40.62	12.53	20.25	3.38	5.06	3.72	9/16, 5/8, 3/4, 7/8	—	—	690
M40T16H	2011871	40	45.69	40.62	15.03	20.25	3.38	5.06	3.72	9/16, 5/8, 3/4, 7/8	—	—	836
M40T18L	2011874	40	47.31	42.25	10.38	22.75	3.38	5.06	3.72	5/8, 3/4, 7/8, 1	—	—	799
M40T18M	2011877	40	47.31	42.25	14.50	22.75	3.38	5.06	3.72	5/8, 3/4, 7/8, 1	—	—	1019
M40T18H	2011881	40	47.31	42.25	16.50	22.75	3.38	5.06	3.72	5/8, 3/4, 7/8, 1	—	—	1158
M40T20L	2011882	40	50.06	45.00	10.38	24.75	3.38	5.06	3.72	3/4, 7/8, 1, 1-1/8	—	—	889
M40T20M	2011883	40	50.06	45.00	14.88	24.75	3.38	5.06	3.72	3/4, 7/8, 1, 1-1/8	—	—	1185
M40T20H	2011884	40	50.06	45.00	18.88	24.75	3.38	5.06	3.72	3/4, 7/8, 1, 1-1/8	—	—	1531
M40Q14L	2011885	40	43.44	38.38	10.44	18.00	3.38	5.06	3.72	1/2, 9/16, 5/8, 3/4	—	—	535
M40Q14M	2011886	40	43.44	38.38	15.44	18.00	3.38	5.06	3.72	1/2, 9/16, 5/8, 3/4	—	—	745
M40Q14H	2011891	40	43.44	38.38	16.88	18.00	3.38	5.06	3.72	1/2, 9/16, 5/8, 3/4	—	—	910
M40Q16L	2011895	40	45.69	40.62	10.44	20.25	3.38	5.06	3.72	9/16, 5/8, 3/4, 7/8	—	—	627
M40Q16M	2011904	40	45.69	40.62	14.88	20.25	3.38	5.06	3.72	9/16, 5/8, 3/4, 7/8	—	—	785
M40Q16H	2011908	40	45.69	40.62	17.38	20.25	3.38	5.06	3.72	9/16, 5/8, 3/4, 7/8	—	—	930
M40Q18L	2011910	40	47.31	42.25	13.31	22.75	3.38	5.06	3.72	5/8, 3/4, 7/8, 1	—	—	930
M40Q18M	2011913	40	47.31	42.25	17.44	22.75	3.38	5.06	3.72	5/8, 3/4, 7/8, 1	—	—	1150
M40Q18H	2011917	40	47.31	42.25	19.44	22.75	3.38	5.06	3.72	5/8, 3/4, 7/8, 1	—	—	1290
M40QN14L	2011921	40	47.00	38.88	13.25	18.00	3.38	5.06	3.72	1/2, 9/16, 5/8, 3/4	1.25	1.41	510
M40QN14M	2011922	40	47.00	38.88	18.25	18.00	3.38	5.06	3.72	1/2, 9/16, 5/8, 3/4	1.25	1.41	735
M40QN14H	2011923	40	47.00	38.88	19.69	18.00	3.38	5.06	3.72	1/2, 9/16, 5/8, 3/4	1.25	1.41	900
45 Tons @ - Ultimate Load is 3.6 times the Working Load Limit													
M45S24L	2011924	45@	59.81	50.00	7.81	28.75	3.38	5.06	3.72	7/8, 1, 1-1/8, 1-1/4	1.75	2.28	805
M45S24M	2011925	45@	59.81	50.00	15.56	28.75	3.38	5.06	3.72	7/8, 1, 1-1/8, 1-1/4	1.75	2.28	1445
M45S24H	2011926	45@	59.81	50.00	19.56	28.75	3.38	5.06	3.72	7/8, 1, 1-1/8, 1-1/4	1.75	2.28	1940
M45D20L	2011928	45@	50.06	45.00	7.81	24.75	3.38	5.06	3.72	3/4, 7/8, 1, 1-1/8	—	—	759
M45D20M	2011931	45@	50.06	45.00	12.31	24.75	3.38	5.06	3.72	3/4, 7/8, 1, 1-1/8	—	—	1055
M45D20H	2011937	45@	50.06	45.00	16.31	24.75	3.38	5.06	3.72	3/4, 7/8, 1, 1-1/8	—	—	1401
M45T16L	2011942	45@	45.69	40.62	8.19	20.25	3.38	5.06	3.72	9/16, 5/8, 3/4, 7/8	—	—	525
M45T16M	2011951	45@	45.69	40.62	12.53	20.25	3.38	5.06	3.72	9/16, 5/8, 3/4, 7/8	—	—	690
M45T16H	2011960	45@	45.69	40.62	15.03	20.25	3.38	5.06	3.72	9/16, 5/8, 3/4, 7/8	—	—	836
M45T18L	2011969	45@	47.31	42.25	10.38	22.75	3.38	5.06	3.72	5/8, 3/4, 7/8, 1	—	—	799
M45T18M	2011978	45@	47.31	42.25	14.50	22.75	3.38	5.06	3.72	5/8, 3/4, 7/8, 1	—	—	1019
M45T18H	2011987	45@	47.31	42.25	16.50	22.75	3.38	5.06	3.72	5/8, 3/4, 7/8, 1	—	—	1158
M45T20L	2011993	45@	50.06	45.00	10.38	24.75	3.38	5.06	3.72	3/4, 7/8, 1, 1-1/8	—	—	889
M45T20M	2011996	45@	50.06	45.00	14.88	24.75	3.38	5.06	3.72	3/4, 7/8, 1, 1-1/8	—	—	1185
M45T20H	2012000	45@	50.06	45.00	18.88	24.75	3.38	5.06	3.72	3/4, 7/8, 1, 1-1/8	—	—	1531
M45Q14L	2012001	45@	43.44	38.38	10.44	18.00	3.38	5.06	3.72	1/2, 9/16, 5/8, 3/4	—	—	535
M45Q14M	2012003	45@	43.44	38.38	15.44	18.00	3.38	5.06	3.72	1/2, 9/16, 5/8, 3/4	—	—	745
M45Q14H	2012004	45@	43.44	38.38	16.88	18.00	3.38	5.06	3.72	1/2, 9/16, 5/8, 3/4	—	—	910
M45Q16L	2012005	45@	45.69	40.62	10.44	20.25	3.38	5.06	3.72	9/16, 5/8, 3/4, 7/8	—	—	627
M45Q16M	2012006	45@	45.69	40.62	14.88	20.25	3.38	5.06	3.72	9/16, 5/8, 3/4, 7/8	—	—	785
M45Q16H	2012007	45@	45.69	40.62	17.38	20.25	3.38	5.06	3.72	9/16, 5/8, 3/4, 7/8	—	—	930
M45Q18L	2012008	45@	47.31	42.25	13.31	22.75	3.38	5.06	3.72	5/8, 3/4, 7/8, 1	—	—	930
M45Q18M	2012009	45@	47.31	42.25	17.44	22.75	3.38	5.06	3.72	5/8, 3/4, 7/8, 1	—	—	1150
M45Q18H	2012010	45@	47.31	42.25	19.44	22.75	3.38	5.06	3.72	5/8, 3/4, 7/8, 1	—	—	1290
M45QN16L	2011997	45@	49.19	40.62	13.25	20.25	3.38	5.06	3.72	9/16, 5/8, 3/4, 7/8	1.25	1.44	666
M45QN16M	2011998	45@	49.19	40.62	17.62	20.25	3.38	5.06	3.72	9/16, 5/8, 3/4, 7/8	1.25	1.44	822
M45QN16H	2011999	45@	49.19	40.62	20.12	20.25	3.38	5.06	3.72	9/16, 5/8, 3/4, 7/8	1.25	1.44	968
50 Tons													
M50S24L	2012015	50	64.12	53.12	7.81	28.75	4.12	6.00	4.44	7/8, 1, 1-1/8, 1-1/4	2.00	2.53	960
M50S24M	2012016	50	64.12	53.12	15.56	28.75	4.12	6.00	4.44	7/8, 1, 1-1/8, 1-1/4	2.00	2.53	1565
M50S24H	2012017	50	64.12	53.12	19.56	28.75	4.12	6.00	4.44	7/8, 1, 1-1/8, 1-1/4	2.00	2.53	2075
M50D24L	2012018	50	59.12	53.12	7.81	28.75	4.12	6.00	4.44	7/8, 1, 1-1/8, 1-1/4	—	—	1140
M50D24M	2012019	50	59.12	53.12	15.56	28.75	4.12	6.00	4.44	7/8, 1, 1-1/8, 1-1/4	—	—	1770
M50D24H	2012020	50	59.12	53.12	19.56	28.75	4.12	6.00	4.44	7/8, 1, 1-1/8, 1-1/4	—	—	2252

Copyright © 2016 The Crosby Group LLC All Rights Reserved

380 Series Crane Blocks

Model No.	Inquiry Stock No.	Working Load Limit (Tons) †	A Overall Length (in.)	B Net Length (in.)	E Thickness (in.)	F Width (in.)	H Throat Opening with Flapper (in.)	J Hook Thickness (in.)	K Hook Width (in.)	Standard Wireline Sizes (in.)*	Dead End ‡ T Thickness (in.)	Dead End ‡ U Pin Hole (in.)	Weight Each (lbs.)
M50T18L	2012014	50	53.62	47.62	10.38	22.75	4.12	6.00	4.44	5/8, 3/4, 7/8, 1	—	—	930
M50T18M	2012023	50	53.62	47.62	14.50	22.75	4.12	6.00	4.44	5/8, 3/4, 7/8, 1	—	—	1100
M50T18H	2012027	50	53.62	47.62	16.50	22.75	4.12	6.00	4.44	5/8, 3/4, 7/8, 1	—	—	1240
M50T20L	2012032	50	54.12	48.12	10.38	24.75	4.12	6.00	4.44	3/4, 7/8, 1, 1-1/8	—	—	989
M50T20M	2012041	50	54.12	48.12	14.88	24.75	4.12	6.00	4.44	3/4, 7/8, 1, 1-1/8	—	—	1295
M50T20H	2012045	50	54.12	48.12	18.88	24.75	4.12	6.00	4.44	3/4, 7/8, 1, 1-1/8	—	—	1635
M50T24L	2012048	50	59.12	53.12	10.38	28.75	4.12	6.00	4.44	7/8, 1, 1-1/8, 1-1/4	—	—	1200
M50T24M	2012050	50	59.12	53.12	18.13	28.75	4.12	6.00	4.44	7/8, 1, 1-1/8, 1-1/4	—	—	1890
M50T24H	2012055	50	59.12	53.12	22.12	28.75	4.12	6.00	4.44	7/8, 1, 1-1/8, 1-1/4	—	—	2368
M50Q16L	2012059	50	49.88	43.88	13.31	20.25	4.12	6.00	4.44	9/16, 5/8, 3/4, 7/8	—	—	814
M50Q16M	2012068	50	49.88	43.88	17.69	20.25	4.12	6.00	4.44	9/16, 5/8, 3/4, 7/8	—	—	980
M50Q16H	2012073	50	49.88	43.88	20.19	20.25	4.12	6.00	4.44	9/16, 5/8, 3/4, 7/8	—	—	1125
M50Q18L	2012077	50	53.62	50.62	13.31	22.75	4.12	6.00	4.44	5/8, 3/4, 7/8, 1	—	—	995
M50Q18M	2012086	50	53.62	50.62	17.44	22.75	4.12	6.00	4.44	5/8, 3/4, 7/8, 1	—	—	1220
M50Q18H	2012091	50	53.62	50.62	19.44	22.75	4.12	6.00	4.44	5/8, 3/4, 7/8, 1	—	—	1360
M50Q20L	2012095	50	54.13	48.13	13.31	24.75	4.12	6.00	4.44	3/4, 7/8, 1, 1-1/8	—	—	1140
M50Q20M	2012097	50	54.13	48.13	17.81	24.75	4.12	6.00	4.44	3/4, 7/8, 1, 1-1/8	—	—	1490
M50Q20H	2012101	50	54.13	48.13	21.81	24.75	4.12	6.00	4.44	3/4, 7/8, 1, 1-1/8	—	—	1880
M50QN14L	2012056	50	51.75	41.88	13.25	18.00	4.12	6.00	4.44	1/2, 9/16, 5/8, 3/4	1.25	1.41	805
M50QN14M	2012057	50	51.75	41.88	18.19	18.00	4.12	6.00	4.44	1/2, 9/16, 5/8, 3/4	1.25	1.41	960
M50QN14H	2012058	50	51.75	41.88	22.63	18.00	4.12	6.00	4.44	1/2, 9/16, 5/8, 3/4	1.25	1.41	1185
M50QN16L	2012060	50	54.00	43.88	13.25	20.25	4.12	6.00	4.44	9/16, 5/8, 3/4, 7/8	1.25	1.41	875
M50QN16M	2012061	50	54.00	43.88	17.63	20.25	4.12	6.00	4.44	9/16, 5/8, 3/4, 7/8	1.25	1.41	1030
M50QN16H	2012062	50	54.00	43.88	20.13	20.25	4.12	6.00	4.44	9/16, 5/8, 3/4, 7/8	1.25	1.41	1180
M50SX14L	2012063	50	51.75	41.88	15.53	18.00	4.12	6.00	4.44	1/2, 9/16, 5/8, 3/4	1.25	1.41	926
M50SX14M	2012064	50	51.75	41.88	20.53	18.00	4.12	6.00	4.44	1/2, 9/16, 5/8, 3/4	1.25	1.41	1020
M50SX14H	2012065	50	51.75	41.88	24.94	18.00	4.12	6.00	4.44	1/2, 9/16, 5/8, 3/4	1.25	1.41	1250
55 Tons													
M55S24L	2012105	55	64.12	53.12	7.81	28.75	4.12	6.00	4.44	7/8, 1, 1-1/8, 1-1/4	2.00	2.53	960
M55S24M	2012106	55	64.12	53.12	15.56	28.75	4.12	6.00	4.44	7/8, 1, 1-1/8, 1-1/4	2.00	2.53	1595
M55S24H	2012107	55	64.12	53.12	19.56	28.75	4.12	6.00	4.44	7/8, 1, 1-1/8, 1-1/4	2.00	2.53	2075
M55D24L	2012108	55	59.12	53.12	7.81	28.75	4.12	6.00	4.44	7/8, 1, 1-1/8, 1-1/4	—	—	1140
M55D24M	2012109	55	59.12	53.12	15.56	28.75	4.12	6.00	4.44	7/8, 1, 1-1/8, 1-1/4	—	—	1770
M55D24H	2012110	55	59.12	53.12	19.56	28.75	4.12	6.00	4.44	7/8, 1, 1-1/8, 1-1/4	—	—	2250
M55T18L	2012104	55	53.62	47.62	10.38	22.75	4.12	6.00	4.44	5/8, 3/4, 7/8, 1	—	—	880
M55T18M	2012113	55	53.62	47.62	14.50	22.75	4.12	6.00	4.44	5/8, 3/4, 7/8, 1	—	—	1100
M55T18H	2012122	55	53.62	47.62	16.50	22.75	4.12	6.00	4.44	5/8, 3/4, 7/8, 1	—	—	1240
M55T20L	2012111	55	54.12	48.12	10.38	24.75	4.12	6.00	4.44	3/4, 7/8, 1, 1-1/8	—	—	989
M55T20M	2012114	55	54.12	48.12	14.88	24.75	4.12	6.00	4.44	3/4, 7/8, 1, 1-1/8	—	—	1295
M55T20H	2012123	55	54.12	48.12	18.88	24.75	4.12	6.00	4.44	3/4, 7/8, 1, 1-1/8	—	—	1635
M55T24L	2012112	55	59.12	53.12	10.38	28.75	4.12	6.00	4.44	7/8, 1, 1-1/8, 1-1/4	—	—	1200
M55T24M	2012124	55	59.12	53.12	18.13	28.75	4.12	6.00	4.44	7/8, 1, 1-1/8, 1-1/4	—	—	1890
M55T24H	2012125	55	59.12	53.12	22.13	28.75	4.12	6.00	4.44	7/8, 1, 1-1/8, 1-1/4	—	—	2368
M55Q16L	2012131	55	49.88	43.88	13.31	20.25	4.12	6.00	4.44	9/16, 5/8, 3/4, 7/8	-	-	814
M55Q16M	2012140	55	49.88	43.88	17.69	20.25	4.12	6.00	4.44	9/16, 5/8, 3/4, 7/8	-	-	980
M55Q16H	2012143	55	49.88	43.88	20.19	20.25	4.12	6.00	4.44	9/16, 5/8, 3/4, 7/8	-	-	1125
M55Q18L	2012146	55	53.63	50.63	13.31	22.75	4.12	6.00	4.44	5/8, 3/4, 7/8, 1	-	-	995
M55Q18M	2012149	55	53.63	50.63	17.44	22.75	4.12	6.00	4.44	5/8, 3/4, 7/8, 1	-	-	1220
M55Q18H	2012153	55	53.63	50.63	19.44	22.75	4.12	6.00	4.44	5/8, 3/4, 7/8, 1	-	-	1360
M55Q20L	2012171	55	54.12	48.12	13.31	24.75	4.12	6.00	4.44	3/4, 7/8, 1, 1-1/8	-	-	1140
M55Q20M	2012172	55	54.12	48.12	17.81	24.75	4.12	6.00	4.44	3/4, 7/8, 1, 1-1/8	-	-	1490
M55Q20H	2012173	55	54.12	48.12	22.81	24.75	4.12	6.00	4.44	3/4, 7/8, 1, 1-1/8	-	-	1855
M55QN14L	2012126	55	51.75	41.88	13.25	18.00	4.12	6.00	4.44	1/2, 9/16, 5/8, 3/4	1.25	1.41	840
M55QN14M	2012127	55	51.75	41.88	18.25	18.00	4.12	6.00	4.44	1/2, 9/16, 5/8, 3/4	1.25	1.41	1035
M55QN14H	2012128	55	51.75	41.88	22.62	18.00	4.12	6.00	4.44	1/2, 9/16, 5/8, 3/4	1.25	1.41	1185
M55QN16L	2012158	55	54.00	43.88	13.25	20.25	4.12	6.00	4.44	9/16, 5/8, 3/4, 7/8	1.25	1.41	875
M55QN16M	2012167	55	54.00	43.88	17.63	20.25	4.12	6.00	4.44	9/16, 5/8, 3/4, 7/8	1.25	1.41	1030
M55QN16H	2012170	55	54.00	43.88	20.13	20.25	4.12	6.00	4.44	9/16, 5/8, 3/4, 7/8	1.25	1.41	1180
M55QN18L	2012147	55	58.62	47.62	17.50	22.75	4.12	6.00	4.44	5/8, 3/4, 7/8, 1	1.25	1.41	1380
M55QN18M	2012150	55	58.62	47.62	21.62	22.75	4.12	6.00	4.44	5/8, 3/4, 7/8, 1	1.25	1.41	1600
M55QN18H	2012154	55	58.62	47.62	23.62	22.75	4.12	6.00	4.44	5/8, 3/4, 7/8, 1	1.25	1.41	1750
M55SX14L	2012135	55	51.75	41.88	15.53	18.00	4.12	6.00	4.44	1/2, 9/16, 5/8, 3/4	1.25	1.41	926
M55SX14M	2012141	55	51.75	41.88	20.47	18.00	4.12	6.00	4.44	1/2, 9/16, 5/8, 3/4	1.25	1.41	1020
M55SX14H	2012144	55	51.75	41.88	24.91	18.00	4.12	6.00	4.44	1/2, 9/16, 5/8, 3/4	1.25	1.41	1250
60 Tons													
M60D24L	2012175	60	59.12	53.12	7.81	28.75	4.12	6.00	4.44	7/8, 1, 1-1/8, 1-1/4	-	-	1140
M60D24M	2012179	60	59.12	53.12	12.31	28.75	4.12	6.00	4.44	7/8, 1, 1-1/8, 1-1/4	-	-	1770
M60D24H	2012183	60	59.12	53.12	19.56	28.75	4.12	6.00	4.44	7/8, 1, 1-1/8, 1-1/4	-	-	2250
M60T18L	2012187	60	53.62	47.62	10.38	22.75	4.12	6.00	4.44	5/8, 3/4, 7/8, 1	-	-	881
M60T18M	2012191	60	53.62	47.62	14.50	22.75	4.12	6.00	4.44	5/8, 3/4, 7/8, 1	-	-	1115

Copyright © 2016 The Crosby Group LLC All Rights Reserved

380 Series Crane Blocks

Model No.	Inquiry Stock No.	Working Load Limit (Tons) †	A Overall Length (in.)	B Net Length (in.)	E Thickness (in.)	F Width (in.)	H Throat Opening with Flapper (in.)	J Hook Thickness (in.)	K Hook Width (in.)	Standard Wireline Sizes (in.)*	Dead End ‡ T Thickness (in.)	Dead End ‡ U Pin Hole (in.)	Weight Each (lbs.)
M60T18H	2012195	60	53.62	47.62	16.50	22.75	4.12	6.00	4.44	5/8, 3/4, 7/8, 1	-	-	1240
M60T20L	2012199	60	54.12	48.12	10.38	24.75	4.12	6.00	4.44	3/4, 7/8, 1, 1-1/8	-	-	950
M60T20M	2012203	60	54.12	48.12	14.88	24.75	4.12	6.00	4.44	3/4, 7/8, 1, 1-1/8	-	-	1330
M60T20H	2012207	60	54.12	48.12	18.88	24.75	4.12	6.00	4.44	3/4, 7/8, 1, 1-1/8	-	-	1695
M60T24L	2012211	60	59.12	53.12	10.31	28.75	4.12	6.00	4.44	7/8, 1, 1-1/8, 1-1/4	-	-	1255
M60T24M	2012215	60	59.12	53.12	18.12	28.75	4.12	6.00	4.44	7/8, 1, 1-1/8, 1-1/4	-	-	1890
M60T24H	2012219	60	59.12	53.12	22.01	28.75	4.12	6.00	4.44	7/8, 1, 1-1/8, 1-1/4	-	-	2365
M60Q16L	2012223	60	49.88	43.88	13.31	20.25	4.12	6.00	4.44	9/16, 5/8, 3/4, 7/8	-	-	905
M60Q16M	2012227	60	49.88	43.88	17.69	20.25	4.12	6.00	4.44	9/16, 5/8, 3/4, 7/8	-	-	1030
M60Q16H	2012231	60	49.88	43.88	20.19	20.25	4.12	6.00	4.44	9/16, 5/8, 3/4, 7/8	-	-	1220
M60Q18L	2012235	60	53.62	47.62	13.31	22.75	4.12	6.00	4.44	5/8, 3/4, 7/8, 1	-	-	1002
M60Q18M	2012239	60	53.62	47.62	17.44	22.75	4.12	6.00	4.44	5/8, 3/4, 7/8, 1	-	-	1228
M60Q18H	2012243	60	53.62	47.62	19.44	22.75	4.12	6.00	4.44	5/8, 3/4, 7/8, 1	-	-	1366
M60Q20L	2012247	60	54.12	48.12	13.31	24.75	4.12	6.00	4.44	3/4, 7/8, 1, 1-1/8	-	-	1140
M60Q20M	2012251	60	54.12	48.12	17.81	24.75	4.12	6.00	4.44	3/4, 7/8, 1, 1-1/8	-	-	1490
M60Q20H	2012255	60	54.12	48.12	21.81	24.75	4.12	6.00	4.44	3/4, 7/8, 1, 1-1/8	-	-	1855
M60Q24L	2012259	60	59.12	53.12	13.31	28.75	4.12	6.00	4.44	7/8, 1, 1-1/8, 1-1/4	-	-	1452
M60Q24M	2012263	60	59.12	53.12	21.06	28.75	4.12	6.00	4.44	7/8, 1, 1-1/8, 1-1/4	-	-	2120
M60Q24H	2012267	60	59.12	53.12	25.06	28.75	4.12	6.00	4.44	7/8, 1, 1-1/8, 1-1/4	-	-	2600
M60QN20L	2012271	60	59.12	48.12	17.50	24.75	4.12	6.00	4.44	3/4, 7/8, 1, 1-1/8	1.50	1.41	1565
M60QN20M	2012275	60	59.12	48.12	22.00	24.75	4.12	6.00	4.44	3/4, 7/8, 1, 1-1/8	1.50	1.41	1860
M60QN20H	2012279	60	59.12	48.12	26.00	24.75	4.12	6.00	4.44	3/4, 7/8, 1, 1-1/8	1.50	1.41	2210
M60SX14L	2012283	60	51.75	45.75	15.53	18.00	4.12	6.00	4.44	1/2, 9/16, 5/8, 3/4	1.25	1.41	925
M60SX14M	2012287	60	51.75	45.75	20.47	18.00	4.12	6.00	4.44	1/2, 9/16, 5/8, 3/4	1.25	1.41	1100
M60SX14H	2012291	60	51.75	45.75	24.84	18.00	4.12	6.00	4.44	1/2, 9/16, 5/8, 3/4	1.25	1.41	1250
M60SX18L	2012295	60	58.62	47.62	19.53	22.75	4.12	6.00	4.44	5/8, 3/4, 7/8, 1	1.50	2.06	1410
M60SX18M	2012299	60	58.62	47.62	23.66	22.75	4.12	6.00	4.44	5/8, 3/4, 7/8, 1	1.50	2.06	1650
M60SX18H	2012303	60	58.62	47.62	25.66	22.75	4.12	6.00	4.44	5/8, 3/4, 7/8, 1	1.50	2.06	1798
65 Tons													
M65D24L	2012376	65	59.12	53.12	7.81	28.75	4.12	6.00	4.44	7/8, 1, 1-1/8, 1-1/4	—	—	1140
M65D24M	2012377	65	59.12	53.12	15.56	28.75	4.12	6.00	4.44	7/8, 1, 1-1/8, 1-1/4	—	—	1770
M65D24H	2012378	65	59.12	53.12	19.56	28.75	4.12	6.00	4.44	7/8, 1, 1-1/8, 1-1/4	—	—	2252
M65T18L	2012304	65	53.62	47.62	10.38	22.75	4.12	6.00	4.44	5/8, 3/4, 7/8, 1	—	—	930
M65T18M	2012305	65	53.62	47.62	14.50	22.75	4.12	6.00	4.44	5/8, 3/4, 7/8, 1	—	—	1100
M65T18H	2012306	65	53.62	47.62	16.50	22.75	4.12	6.00	4.44	5/8, 3/4, 7/8, 1	—	—	1300
M65T20L	2012307	65	54.12	48.12	10.38	24.75	4.12	6.00	4.44	3/4, 7/8, 1, 1-1/8	—	—	995
M65T20M	2012311	65	54.12	48.12	14.88	24.75	4.12	6.00	4.44	3/4, 7/8, 1, 1-1/8	—	—	1300
M65T20H	2012315	65	54.12	48.12	18.88	24.75	4.12	6.00	4.44	3/4, 7/8, 1, 1-1/8	—	—	1635
M65T24L	2012316	65	59.12	53.12	10.38	28.75	4.12	6.00	4.44	7/8, 1, 1-1/8, 1-1/4	—	—	1255
M65T24M	2012317	65	59.12	53.12	18.12	28.75	4.12	6.00	4.44	7/8, 1, 1-1/8, 1-1/4	—	—	1890
M65T24H	2012318	65	59.12	53.12	22.12	28.75	4.12	6.00	4.44	7/8, 1, 1-1/8, 1-1/4	—	—	2365
M65Q16L	2012312	65	49.88	43.88	13.31	20.25	4.12	6.00	4.44	9/16, 5/8, 3/4, 7/8	—	—	905
M65Q16M	2012313	65	49.88	43.88	17.69	20.25	4.12	6.00	4.44	9/16, 5/8, 3/4, 7/8	—	—	1030
M65Q16H	2012314	65	49.88	43.88	20.19	20.25	4.12	6.00	4.44	9/16, 5/8, 3/4, 7/8	—	—	1220
M65Q18L	2012340	65	53.62	47.62	13.31	22.75	4.12	6.00	4.44	5/8, 3/4, 7/8, 1	—	—	1060
M65Q18M	2012341	65	53.62	47.62	17.44	22.75	4.12	6.00	4.44	5/8, 3/4, 7/8, 1	—	—	1215
M65Q18H	2012342	65	53.62	47.62	19.44	22.75	4.12	6.00	4.44	5/8, 3/4, 7/8, 1	—	—	1430
M65Q20L	2012319	65	54.12	48.12	13.31	24.75	4.12	6.00	4.44	3/4, 7/8, 1, 1-1/8	—	—	1140
M65Q20M	2012323	65	54.12	48.12	17.81	24.75	4.12	6.00	4.44	3/4, 7/8, 1, 1-1/8	—	—	1490
M65Q20H	2012327	65	54.12	48.12	21.81	24.75	4.12	6.00	4.44	3/4, 7/8, 1, 1-1/8	—	—	1855
M65Q24L	2012328	65	59.12	53.12	13.31	28.75	4.12	6.00	4.44	7/8, 1, 1-1/8, 1-1/4	—	—	1452
M65Q24M	2012329	65	59.12	53.12	21.06	28.75	4.12	6.00	4.44	7/8, 1, 1-1/8, 1-1/4	—	—	2120
M65Q24H	2012330	65	59.12	53.12	25.06	28.75	4.12	6.00	4.44	7/8, 1, 1-1/8, 1-1/4	—	—	2600
M65QN16L	2012331	65	56.88	45.88	17.50	20.25	4.12	6.00	4.44	9/16, 5/8, 3/4, 7/8	1.50	1.41	885
M65QN16M	2012335	65	56.88	45.88	21.88	20.25	4.12	6.00	4.44	9/16, 5/8, 3/4, 7/8	1.50	1.41	1047
M65QN16H	2012339	65	56.88	45.88	24.38	20.25	4.12	6.00	4.44	9/16, 5/8, 3/4, 7/8	1.50	1.41	1200
M65QN18L	2012343	65	58.62	47.62	17.50	22.75	4.12	6.00	4.44	5/8, 3/4, 7/8, 1	1.50	1.41	1380
M65QN18M	2012347	65	58.62	47.62	21.62	22.75	4.12	6.00	4.44	5/8, 3/4, 7/8, 1	1.50	1.41	1600
M65QN18H	2012351	65	58.62	47.62	23.62	22.75	4.12	6.00	4.44	5/8, 3/4, 7/8, 1	1.50	1.41	1748
M65QN20L	2012355	65	59.12	48.12	17.50	24.75	4.12	6.00	4.44	3/4, 7/8, 1, 1-1/8	1.50	1.41	1565
M65QN20M	2012359	65	59.12	48.12	22.00	24.75	4.12	6.00	4.44	3/4, 7/8, 1, 1-1/8	1.50	1.41	1860
M65QN20H	2012363	65	59.12	48.12	26.00	24.75	4.12	6.00	4.44	3/4, 7/8, 1, 1-1/8	1.50	1.41	2210
M65QN24L	2012364	65	62.62	51.62	17.50	28.75	4.12	6.00	4.44	7/8, 1, 1-1/8, 1-1/4	1.50	1.41	1831
M65QN24M	2012368	65	62.62	51.62	25.25	28.75	4.12	6.00	4.44	7/8, 1, 1-1/8, 1-1/4	1.50	1.41	2536
M65QN24H	2012372	65	62.62	51.62	29.25	28.75	4.12	6.00	4.44	7/8, 1, 1-1/8, 1-1/4	1.50	1.41	2999
M65SX16L	2012352	65	56.88	45.88	19.53	20.25	4.12	6.00	4.44	9/16, 5/8, 3/4, 7/8	1.50	2.06	1170
M65SX16M	2012353	65	56.88	45.88	23.91	20.25	4.12	6.00	4.44	9/16, 5/8, 3/4, 7/8	1.50	2.06	1335
M65SX16H	2012354	65	56.88	45.88	26.41	20.25	4.12	6.00	4.44	9/16, 5/8, 3/4, 7/8	1.50	2.06	1485
M65SX18L	2012356	65	58.62	47.62	19.53	22.75	4.12	6.00	4.44	5/8, 3/4, 7/8, 1	1.50	2.06	1410
M65SX18M	2012357	65	58.62	47.62	23.66	22.75	4.12	6.00	4.44	5/8, 3/4, 7/8, 1	1.50	2.06	1650

Copyright © 2016 The Crosby Group LLC All Rights Reserved

380 Series Crane Blocks

Model No.	Inquiry Stock No.	Working Load Limit (Tons) †	A Overall Length (in.)	B Net Length (in.)	E Thickness (in.)	F Width (in.)	H Throat Opening with Flapper (in.)	J Hook Thickness (in.)	K Hook Width (in.)	Standard Wireline Sizes (in.)*	Dead End ‡ T Thickness (in.)	Dead End ‡ U Pin Hole (in.)	Weight Each (lbs.)
M65SX18H	2012358	65	58.62	47.62	25.66	22.75	4.12	6.00	4.44	5/8, 3/4, 7/8, 1	1.50	2.06	1798
M65SX20L	2012367	65	59.12	48.12	19.53	24.75	4.12	6.00	4.44	3/4, 7/8, 1, 1-1/8	1.50	2.06	1624
M65SX20M	2012371	65	59.12	48.12	24.03	24.75	4.12	6.00	4.44	3/4, 7/8, 1, 1-1/8	1.50	2.06	1920
M65SX20H	2012375	65	59.12	48.12	28.03	24.75	4.12	6.00	4.44	3/4, 7/8, 1, 1-1/8	1.50	2.06	2272
70 Tons													
M70D24L	2012379	70	64.44	57.75	11.09	28.75	5.38	6.69	4.25	7/8, 1, 1-1/8, 1-1/4	—	—	1522
M70D24M	2012383	70	64.44	57.75	18.84	28.75	5.38	6.69	4.25	7/8, 1, 1-1/8, 1-1/4	—	—	2190
M70D24H	2012387	70	64.44	57.75	22.84	28.75	5.38	6.69	4.25	7/8, 1, 1-1/8, 1-1/4	—	—	2670
M70T18L	2012391	70	58.94	52.25	11.12	22.75	5.38	6.69	4.25	5/8, 3/4, 7/8, 1	—	—	1260
M70T18M	2012395	70	58.94	52.25	15.25	22.75	5.38	6.69	4.25	5/8, 3/4, 7/8, 1	—	—	1500
M70T18H	2012399	70	58.94	52.25	17.25	22.75	5.38	6.69	4.25	5/8, 3/4, 7/8, 1	—	—	1650
M70T20L	2012403	70	60.94	54.25	11.12	24.75	5.38	6.69	4.25	3/4, 7/8, 1, 1-1/8	—	—	1414
M70T20M	2012407	70	60.94	54.25	15.62	24.75	5.38	6.69	4.25	3/4, 7/8, 1, 1-1/8	—	—	1710
M70T20H	2012411	70	60.94	54.25	19.25	24.75	5.38	6.69	4.25	3/4, 7/8, 1, 1-1/8	—	—	2062
M70T24L	2012415	70	64.44	57.75	11.12	28.75	5.38	6.69	4.25	7/8, 1, 1-1/8, 1-1/4	—	—	1642
M70T24M	2012419	70	64.44	57.75	18.88	28.75	5.38	6.69	4.25	7/8, 1, 1-1/8, 1-1/4	—	—	2292
M70T24H	2012423	70	64.44	57.75	22.88	28.75	5.38	6.69	4.25	7/8, 1, 1-1/8, 1-1/4	—	—	2772
M70Q16L	2012427	70	57.19	50.50	13.31	20.25	5.38	6.69	4.25	9/16, 5/8, 3/4, 7/8	—	—	1175
M70Q16M	2012431	70	57.19	50.50	17.69	20.25	5.38	6.69	4.25	9/16, 5/8, 3/4, 7/8	—	—	1340
M70Q16H	2012435	70	57.19	50.50	20.25	20.25	5.38	6.69	4.25	9/16, 5/8, 3/4, 7/8	—	—	1491
M70Q18L	2012439	70	58.94	52.25	13.31	22.75	5.38	6.69	4.25	5/8, 3/4, 7/8, 1	—	—	1300
M70Q18M	2012443	70	58.94	52.25	17.44	22.75	5.38	6.69	4.25	5/8, 3/4, 7/8, 1	—	—	1540
M70Q18H	2012447	70	58.94	52.25	19.44	22.75	5.38	6.69	4.25	5/8, 3/4, 7/8, 1	—	—	1688
M70Q20L	2012451	70	60.94	54.25	13.31	24.75	5.38	6.69	4.25	3/4, 7/8, 1, 1-1/8	—	—	1436
M70Q20M	2012455	70	60.94	54.25	17.81	24.75	5.38	6.69	4.25	3/4, 7/8, 1, 1-1/8	—	—	1732
M70Q20H	2012459	70	60.94	54.25	21.81	24.75	5.38	6.69	4.25	3/4, 7/8, 1, 1-1/8	—	—	2084
M70Q24L	2012463	70	64.44	57.75	13.31	28.75	5.38	6.69	4.25	7/8, 1, 1-1/8, 1-1/4	—	—	1718
M70Q24M	2012467	70	64.44	57.75	21.06	28.75	5.38	6.69	4.25	7/8, 1, 1-1/8, 1-1/4	—	—	2386
M70Q24H	2012471	70	64.44	57.75	25.06	28.75	5.38	6.69	4.25	7/8, 1, 1-1/8, 1-1/4	—	—	2866
M70QN16L	2012475	70	64.56	50.50	18.25	20.25	5.38	6.69	4.25	9/16, 5/8, 3/4, 7/8	1.50	1.66	1340
M70QN16M	2012479	70	64.56	50.50	22.62	20.25	5.38	6.69	4.25	9/16, 5/8, 3/4, 7/8	1.50	1.66	1506
M70QN16H	2012483	70	64.56	50.50	25.12	20.25	5.38	6.69	4.25	9/16, 5/8, 3/4, 7/8	1.50	1.66	1656
M70QN18L	2012487	70	63.31	52.25	18.25	22.75	5.38	6.69	4.25	5/8, 3/4, 7/8, 1	1.50	1.66	1675
M70QN18M	2012491	70	63.31	52.25	22.38	22.75	5.38	6.69	4.25	5/8, 3/4, 7/8, 1	1.50	1.66	1895
M70QN18H	2012495	70	63.31	52.25	24.38	22.75	5.38	6.69	4.25	5/8, 3/4, 7/8, 1	1.50	1.66	2093
M70QN20L	2012499	70	65.94	54.25	18.25	24.75	5.38	6.69	4.25	3/4, 7/8, 1, 1-1/8	1.50	2.06	1889
M70QN20M	2012503	70	65.94	54.25	22.75	24.75	5.38	6.69	4.25	3/4, 7/8, 1, 1-1/8	1.50	2.06	2185
M70QN20H	2012507	70	65.94	54.25	26.75	24.75	5.38	6.69	4.25	3/4, 7/8, 1, 1-1/8	1.50	2.06	2537
M70QN24L	2012511	70	69.44	57.75	18.25	28.75	5.38	6.69	4.25	7/8, 1, 1-1/8, 1-1/4	1.50	2.06	2232
M70QN24M	2012515	70	69.44	57.75	26.00	28.75	5.38	6.69	4.25	7/8, 1, 1-1/8, 1-1/4	1.50	2.06	2900
M70QN24H	2012519	70	69.44	57.75	30.00	28.75	5.38	6.69	4.25	7/8, 1, 1-1/8, 1-1/4	1.50	2.06	3380
M70SX16L	2012523	70	61.56	50.50	20.41	20.25	5.38	6.69	4.25	9/16, 5/8, 3/4, 7/8	1.50	1.66	1544
M70SX16M	2012527	70	61.56	50.50	24.78	20.25	5.38	6.69	4.25	9/16, 5/8, 3/4, 7/8	1.50	1.66	1710
M70SX16H	2012531	70	61.56	50.50	27.28	20.25	5.38	6.69	4.25	9/16, 5/8, 3/4, 7/8	1.50	1.66	1860
M70SX18L	2012535	70	63.94	52.25	20.41	22.75	5.38	6.69	4.25	5/8, 3/4, 7/8, 1	1.50	2.06	1915
M70SX18M	2012539	70	63.94	52.25	24.53	22.75	5.38	6.69	4.25	5/8, 3/4, 7/8, 1	1.50	2.06	2135
M70SX18H	2012543	70	63.94	52.25	26.53	22.75	5.38	6.69	4.25	5/8, 3/4, 7/8, 1	1.50	2.06	2283
M70SX20L	2012547	70	65.94	54.25	20.41	24.75	5.38	6.69	4.25	3/4, 7/8, 1, 1-1/8	1.50	2.06	2015
M70SX20M	2012551	70	65.94	54.25	24.91	24.75	5.38	6.69	4.25	3/4, 7/8, 1, 1-1/8	1.50	2.06	2311
M70SX20H	2012555	70	65.94	54.25	28.91	24.75	5.38	6.69	4.25	3/4, 7/8, 1, 1-1/8	1.50	2.06	2663
75 Tons													
M75D24L	2012559	75	64.44	57.75	11.09	28.75	5.38	6.69	4.25	7/8, 1, 1-1/8, 1-1/4	—	—	1522
M75D24M	2012563	75	64.44	57.75	18.84	28.75	5.38	6.69	4.25	7/8, 1, 1-1/8, 1-1/4	—	—	2190
M75D24H	2012567	75	64.44	57.75	22.84	28.75	5.38	6.69	4.25	7/8, 1, 1-1/8, 1-1/4	—	—	2670
M75T20L	2012571	75	60.94	54.25	11.12	24.75	5.38	6.69	4.25	3/4, 7/8, 1, 1-1/8	—	—	1414
M75T20M	2012575	75	60.94	54.25	15.62	24.75	5.38	6.69	4.25	3/4, 7/8, 1, 1-1/8	—	—	1710
M75T20H	2012579	75	60.94	54.25	19.62	24.75	5.38	6.69	4.25	3/4, 7/8, 1, 1-1/8	—	—	2062
M75T24L	2012583	75	64.44	57.75	11.12	28.75	5.38	6.69	4.25	7/8, 1, 1-1/8, 1-1/4	—	—	1624
M75T24M	2012587	75	64.44	57.75	18.88	28.75	5.38	6.69	4.25	7/8, 1, 1-1/8, 1-1/4	—	—	2290
M75T24H	2012591	75	64.44	57.75	22.88	28.75	5.38	6.69	4.25	7/8, 1, 1-1/8, 1-1/4	—	—	2772
M75Q16L	2012596	75	57.19	50.50	13.31	20.25	5.38	6.69	4.25	9/16, 5/8, 3/4, 7/8	—	—	1175
M75Q16M	2012600	75	57.19	50.50	17.69	20.25	5.38	6.69	4.25	9/16, 5/8, 3/4, 7/8	—	—	1341
M75Q16H	2012604	75	57.19	50.50	20.19	20.25	5.38	6.69	4.25	9/16, 5/8, 3/4, 7/8	—	—	1491
M75Q18L	2012595	75	58.94	52.25	13.31	22.75	5.38	6.69	4.25	5/8, 3/4, 7/8, 1	—	—	1300
M75Q18M	2012599	75	58.94	52.25	17.44	22.75	5.38	6.69	4.25	5/8, 3/4, 7/8, 1	—	—	1540
M75Q18H	2012603	75	58.94	52.25	19.44	22.75	5.38	6.69	4.25	5/8, 3/4, 7/8, 1	—	—	1688
M75Q20L	2012607	75	60.94	54.25	13.31	24.75	5.38	6.69	4.25	3/4, 7/8, 1, 1-1/8	—	—	1436
M75Q20M	2012611	75	60.94	54.25	17.81	24.75	5.38	6.69	4.25	3/4, 7/8, 1, 1-1/8	—	—	1732
M75Q20H	2012615	75	60.94	54.25	21.81	24.75	5.38	6.69	4.25	3/4, 7/8, 1, 1-1/8	—	—	2084
M75Q24L	2012619	75	64.44	57.75	13.31	28.75	5.38	6.69	4.25	7/8, 1, 1-1/8, 1-1/4	—	—	1718

Copyright © 2016 The Crosby Group LLC All Rights Reserved

380 Series Crane Blocks

Model No.	Inquiry Stock No.	Working Load Limit (Tons) †	A Overall Length (in.)	B Net Length (in.)	E Thickness (in.)	F Width (in.)	H Throat Opening with Flapper (in.)	J Hook Thickness (in.)	K Hook Width (in.)	Standard Wireline Sizes (in.)*	Dead End ‡ T Thickness (in.)	Dead End ‡ U Pin Hole (in.)	Weight Each (lbs.)
M75Q24M	2012623	75	64.44	57.75	21.06	28.75	5.38	6.69	4.25	7/8, 1, 1-1/8, 1-1/4	—	—	2386
M75Q24H	2012627	75	64.44	57.75	25.06	28.75	5.38	6.69	4.25	7/8, 1, 1-1/8, 1-1/4	—	—	2866
M75QN16L	2012631	75	61.56	50.50	18.25	20.25	5.38	6.69	4.25	9/16, 5/8, 3/4, 7/8	1.50	1.66	1340
M75QN16M	2012635	75	61.56	50.50	22.62	20.25	5.38	6.69	4.25	9/16, 5/8, 3/4, 7/8	1.50	1.66	1420
M75QN16H	2012639	75	61.56	50.50	25.12	20.25	5.38	6.69	4.25	9/16, 5/8, 3/4, 7/8	1.50	1.66	1656
M75QN18L	2012632	75	63.31	52.25	18.25	22.25	5.38	6.69	4.25	5/8, 3/4, 7/8, 1	1.50	1.66	1675
M75QN18M	2012636	75	63.31	52.25	22.38	22.25	5.38	6.69	4.25	5/8, 3/4, 7/8, 1	1.50	1.66	1895
M75QN18H	2012640	75	63.31	52.25	24.38	22.75	5.38	6.69	4.25	5/8, 3/4, 7/8, 1	1.50	1.66	2043
M75QN20L	2012643	75	65.94	54.25	18.25	24.75	5.38	6.69	4.25	3/4, 7/8, 1, 1-1/8	1.50	2.06	1889
M75QN20M	2012647	75	65.94	54.25	22.75	24.75	5.38	6.69	4.25	3/4, 7/8, 1, 1-1/8	1.50	2.06	2185
M75QN20H	2012651	75	65.94	54.25	26.75	24.75	5.38	6.69	4.25	3/4, 7/8, 1, 1-1/8	1.50	2.06	2537
M75QN24L	2012655	75	64.44	57.75	18.25	28.75	5.38	6.69	4.25	7/8, 1, 1-1/8, 1-1/4	1.50	2.06	2232
M75QN24M	2012659	75	64.44	57.75	26.00	28.75	5.38	6.69	4.25	7/8, 1, 1-1/8, 1-1/4	1.50	2.06	2900
M75QN24H	2012663	75	64.44	57.75	30.00	28.75	5.38	6.69	4.25	7/8, 1, 1-1/8, 1-1/4	1.50	2.06	3380
M75SX16L	2012668	75	61.56	50.50	20.41	20.25	5.38	6.69	4.25	9/16, 5/8, 3/4, 7/8	1.50	2.06	1544
M75SX16M	2012672	75	61.56	50.50	24.78	20.25	5.38	6.69	4.25	9/16, 5/8, 3/4, 7/8	1.50	2.06	1710
M75SX16H	2012676	75	61.56	50.50	27.28	20.25	5.38	6.69	4.25	9/16, 5/8, 3/4, 7/8	1.50	2.06	1860
M75SX18L	2012667	75	63.94	52.25	20.41	22.75	5.38	6.69	4.25	5/8, 3/4, 7/8, 1	1.50	2.06	1915
M75SX18M	2012671	75	63.94	52.25	24.53	22.75	5.38	6.69	4.25	5/8, 3/4, 7/8, 1	1.50	2.06	2135
M75SX18H	2012675	75	63.94	52.25	26.53	22.75	5.38	6.69	4.25	5/8, 3/4, 7/8, 1	1.50	2.06	2283
M75SX20L	2012679	75	65.94	54.25	20.41	24.75	5.38	6.69	4.25	3/4, 7/8, 1, 1-1/8	1.50	2.06	2015
M75SX20M	2012683	75	65.94	54.25	24.91	24.75	5.38	6.69	4.25	3/4, 7/8, 1, 1-1/8	1.50	2.06	2311
M75SX20H	2012687	75	65.94	54.25	28.91	24.75	5.38	6.69	4.25	3/4, 7/8, 1, 1-1/8	1.50	2.06	2663
80 Tons													
M80D24L	2012691	80	64.44	57.75	11.09	28.75	5.38	6.69	4.25	7/8, 1, 1-1/8, 1-1/4	—	—	1522
M80D24M	2012695	80	64.44	57.75	18.84	28.75	5.38	6.69	4.25	7/8, 1, 1-1/8, 1-1/4	—	—	2190
M80D24H	2012699	80	64.44	57.75	22.84	28.75	5.38	6.69	4.25	7/8, 1, 1-1/8, 1-1/4	—	—	2670
M80T20L	2012703	80	60.94	54.25	11.12	24.75	5.38	6.69	4.25	3/4, 7/8, 1, 1-1/8	—	—	1414
M80T20M	2012707	80	60.94	54.25	15.62	24.75	5.38	6.69	4.25	3/4, 7/8, 1, 1-1/8	—	—	1710
M80T20H	2012711	80	60.94	54.25	19.62	24.75	5.38	6.69	4.25	3/4, 7/8, 1, 1-1/8	—	—	2062
M80T24L	2012715	80	64.44	57.75	11.12	28.75	5.38	6.69	4.25	7/8, 1, 1-1/8, 1-1/4	—	—	1624
M80T24M	2012719	80	64.44	57.75	18.88	28.75	5.38	6.69	4.25	7/8, 1, 1-1/8, 1-1/4	—	—	2292
M80T24H	2012723	80	64.44	57.75	22.88	28.75	5.38	6.69	4.25	7/8, 1, 1-1/8, 1-1/4	—	—	2772
M80Q16L	2012727	80	57.19	50.50	13.31	20.25	5.38	6.69	4.25	9/16, 5/8, 3/4, 7/8	—	—	1175
M80Q16M	2012731	80	57.19	50.50	17.69	20.25	5.38	6.69	4.25	9/16, 5/8, 3/4, 7/8	—	—	1341
M80Q16H	2012735	80	57.19	50.50	20.19	20.25	5.38	6.69	4.25	9/16, 5/8, 3/4, 7/8	—	—	1491
M80Q18L	2012739	80	58.94	52.25	13.31	22.75	5.38	6.69	4.25	5/8, 3/4, 7/8, 1	—	—	1300
M80Q18M	2012743	80	58.94	52.25	17.44	22.75	5.38	6.69	4.25	5/8, 3/4, 7/8, 1	—	—	1540
M80Q18H	2012747	80	58.94	52.25	19.44	22.75	5.38	6.69	4.25	5/8, 3/4, 7/8, 1	—	—	1688
M80Q20L	2012751	80	60.94	54.25	13.31	24.75	5.38	6.69	4.25	3/4, 7/8, 1, 1-1/8	—	—	1436
M80Q20M	2012755	80	60.94	54.25	17.81	24.75	5.38	6.69	4.25	3/4, 7/8, 1, 1-1/8	—	—	1732
M80Q20H	2012759	80	60.94	54.25	21.81	24.75	5.38	6.69	4.25	3/4, 7/8, 1, 1-1/8	—	—	2084
M80Q24L	2012763	80	64.44	57.75	13.31	28.75	5.38	6.69	4.25	7/8, 1, 1-1/8, 1-1/4	—	—	1718
M80Q24M	2012767	80	64.44	57.75	21.06	28.75	5.38	6.69	4.25	7/8, 1, 1-1/8, 1-1/4	—	—	2386
M80Q24H	2012771	80	64.44	57.75	25.06	28.75	5.38	6.69	4.25	7/8, 1, 1-1/8, 1-1/4	—	—	2866
M80QN16L	2012775	80	61.56	50.50	18.25	20.25	5.38	6.69	4.25	9/16, 5/8, 3/4, 7/8	1.50	1.66	1340
M80QN16M	2012779	80	61.56	50.50	22.62	20.25	5.38	6.69	4.25	9/16, 5/8, 3/4, 7/8	1.50	1.66	1506
M80QN16H	2012783	80	61.56	50.50	25.12	20.25	5.38	6.69	4.25	9/16, 5/8, 3/4, 7/8	1.50	1.66	1656
M80QN18L	2012787	80	63.31	52.25	18.25	22.75	5.38	6.69	4.25	5/8, 3/4, 7/8, 1	1.50	1.66	1675
M80QN18M	2012791	80	63.31	52.25	22.38	22.75	5.38	6.69	4.25	5/8, 3/4, 7/8, 1	1.50	1.66	1895
M80QN18H	2012795	80	63.31	52.25	24.38	22.75	5.38	6.69	4.25	5/8, 3/4, 7/8, 1	1.50	1.66	2043
M80QN20L	2012799	80	65.94	54.25	18.25	24.75	5.38	6.69	4.25	3/4, 7/8, 1, 1-1/8	1.50	2.06	1889
M80QN20M	2012803	80	65.94	54.25	22.75	24.75	5.38	6.69	4.25	3/4, 7/8, 1, 1-1/8	1.50	2.06	2185
M80QN20H	2012807	80	65.94	54.25	26.75	24.75	5.38	6.69	4.25	3/4, 7/8, 1, 1-1/8	1.50	2.06	2537
M80QN24L	2012811	80	69.44	57.75	18.25	28.75	5.38	6.69	4.25	7/8, 1, 1-1/8, 1-1/4	1.50	2.06	2232
M80QN24M	2012815	80	69.44	57.75	26.00	28.75	5.38	6.69	4.25	7/8, 1, 1-1/8, 1-1/4	1.50	2.06	2900
M80QN24H	2012819	80	69.44	57.75	30.00	28.75	5.38	6.69	4.25	7/8, 1, 1-1/8, 1-1/4	1.50	2.06	3380
M80SX16L	2012823	80	61.56	50.50	20.41	20.25	5.38	6.69	4.25	9/16, 5/8, 3/4, 7/8	1.50	2.06	1544
M80SX16M	2012827	80	61.56	50.50	24.78	20.25	5.38	6.69	4.25	9/16, 5/8, 3/4, 7/8	1.50	2.06	1710
M80SX16H	2012831	80	61.56	50.50	27.28	20.25	5.38	6.69	4.25	9/16, 5/8, 3/4, 7/8	1.50	2.06	1860
M80SX18L	2012835	80	63.94	52.25	20.41	22.75	5.38	6.69	4.25	5/8, 3/4, 7/8, 1	1.50	2.06	1915
M80SX18M	2012839	80	63.94	52.25	24.53	22.75	5.38	6.69	4.25	5/8, 3/4, 7/8, 1	1.50	2.06	2135
M80SX18H	2012843	80	63.94	52.25	26.53	22.75	5.38	6.69	4.25	5/8, 3/4, 7/8, 1	1.50	2.06	2283
M80SX20L	2012847	80	65.94	54.25	20.41	24.75	5.38	6.69	4.25	3/4, 7/8, 1, 1-1/8	1.50	2.06	2015
M80SX20M	2012851	80	65.94	54.25	24.91	24.75	5.38	6.69	4.25	3/4, 7/8, 1, 1-1/8	1.50	2.06	2311
M80SX20H	2012855	80	65.94	54.25	28.91	24.75	5.38	6.69	4.25	3/4, 7/8, 1, 1-1/8	1.50	2.06	2663
90 Tons													
M90T24L	2012859	90	68.5	59.91	11.66	28.75	4.5	8.59	5.5	7/8, 1, 1-1/8, 1-1/4	—	—	1932
M90T24M	2012863	90	68.5	59.91	19.41	28.75	4.5	8.59	5.5	7/8, 1, 1-1/8, 1-1/4	—	—	2600
M90T24H	2012867	90	68.5	59.91	23.41	28.75	4.5	8.59	5.5	7/8, 1, 1-1/8, 1-1/4	—	—	3080

Copyright © 2016 The Crosby Group LLC All Rights Reserved

McKissick® 380 Series Crane Blocks

380 Series Crane Blocks

Model No.	Inquiry Stock No.	Working Load Limit (Tons) †	A Overall Length (in.)	B Net Length (in.)	E Thickness (in.)	F Width (in.)	H Throat Opening with Flapper (in.)	J Hook Thickness (in.)	K Hook Width (in.)	Standard Wireline Sizes (in.)*	Dead End ‡ T Thickness (in.)	Dead End ‡ U Pin Hole (in.)	Weight Each (lbs.)
M90Q20L	2012871	90	64.00	55.41	13.56	24.75	4.50	8.59	5.50	3/4, 7/8, 1, 1-1/8	—	—	1780
M90Q20M	2012875	90	64.00	55.41	18.06	24.75	4.50	8.59	5.50	3/4, 7/8, 1, 1-1/8	—	—	2075
M90Q20H	2012879	90	64.00	55.41	22.06	24.75	4.50	8.59	5.50	3/4, 7/8, 1, 1-1/8	—	—	2427
M90Q24L	2012883	90	68.50	59.91	13.81	28.75	4.50	8.59	5.50	7/8, 1, 1-1/8, 1-1/4	—	—	2068
M90Q24M	2012887	90	68.50	59.91	21.56	28.75	4.50	8.59	5.50	7/8, 1, 1-1/8, 1-1/4	—	—	2700
M90Q24H	2012891	90	68.50	59.91	25.56	28.75	4.50	8.59	5.50	7/8, 1, 1-1/8, 1-1/4	—	—	3180
M90QN18L	2012904	90	67.00	53.91	18.25	22.75	4.50	8.59	5.50	5/8, 3/4, 7/8, 1	1.50	2.28	1930
M90QN18M	2012908	90	67.00	53.91	22.38	22.75	4.50	8.59	5.50	5/8, 3/4, 7/8, 1	1.50	2.28	2170
M90QN18H	2012912	90	67.00	53.91	24.38	22.75	4.50	8.59	5.50	5/8, 3/4, 7/8, 1	1.50	2.28	2318
M90QN20L	2012895	90	69.00	55.41	18.25	24.75	4.50	8.59	5.50	3/4, 7/8, 1, 1-1/8	1.50	2.28	2044
M90QN20M	2012899	90	69.00	55.41	22.75	24.75	4.50	8.59	5.50	3/4, 7/8, 1, 1-1/8	1.50	2.28	2340
M90QN20H	2012903	90	69.00	55.41	26.75	24.75	4.50	8.59	5.50	3/4, 7/8, 1, 1-1/8	1.50	2.28	2692
M90QN24L	2012907	90	73.00	59.41	18.25	28.75	4.50	8.59	5.50	7/8, 1, 1-1/8, 1-1/4	1.50	2.28	2477
M90QN24M	2012911	90	73.00	59.41	26.00	28.75	4.50	8.59	5.50	7/8, 1, 1-1/8, 1-1/4	1.50	2.28	3145
M90QN24H	2012915	90	73.00	59.41	30.00	28.75	4.50	8.59	5.50	7/8, 1, 1-1/8, 1-1/4	1.50	2.28	3625
M90SX18L	2012919	90	67.00	53.41	20.41	22.75	4.50	8.59	5.50	5/8, 3/4, 7/8, 1	1.50	2.06	2080
M90SX18M	2012923	90	67.00	53.41	24.53	22.75	4.50	8.59	5.50	5/8, 3/4, 7/8, 1	1.50	2.06	2300
M90SX18H	2012927	90	67.00	53.41	26.53	22.75	4.50	8.59	5.50	5/8, 3/4, 7/8, 1	1.50	2.06	2448
M90SX20L	2012931	90	69.00	55.41	20.41	24.75	4.50	8.59	5.50	3/4, 7/8, 1, 1-1/8	1.50	2.06	2165
M90SX20M	2012935	90	69.00	55.41	24.91	24.75	4.50	8.59	5.50	3/4, 7/8, 1, 1-1/8	1.50	2.06	2462
M90SX20H	2012939	90	69.00	55.41	28.91	24.75	4.50	8.59	5.50	3/4, 7/8, 1, 1-1/8	1.50	2.06	2816
M90SX24L	2012943	90	73.00	59.41	20.41	28.75	4.50	8.59	5.50	7/8, 1, 1-1/8, 1-1/4	1.50	2.06	2615
M90SX24M	2012947	90	73.00	59.41	28.16	28.75	4.50	8.59	5.50	7/8, 1, 1-1/8, 1-1/4	1.50	2.06	3248
M90SX24H	2012952	90	73.00	59.41	32.16	28.75	4.50	8.59	5.50	7/8, 1, 1-1/8, 1-1/4	1.50	2.06	3730
100 Tons													
M100T24L	2012860	100	68.50	59.91	11.66	28.75	4.50	8.59	5.50	7/8, 1, 1-1/8, 1-1/4	—	—	1932
M100T24M	2012864	100	68.50	59.91	19.41	28.75	4.50	8.59	5.50	7/8, 1, 1-1/8, 1-1/4	—	—	2600
M100T24H	2012868	100	68.50	59.91	23.41	28.75	4.50	8.59	5.50	7/8, 1, 1-1/8, 1-1/4	—	—	3080
M100Q20L	2012967	100	64.00	55.41	13.56	24.75	4.50	8.59	5.50	3/4, 7/8, 1, 1-1/8	—	—	1780
M100Q20M	2012971	100	64.00	55.41	18.06	24.75	4.50	8.59	5.50	3/4, 7/8, 1, 1-1/8	—	—	2075
M100Q20H	2012975	100	64.00	55.41	22.06	24.75	4.50	8.59	5.50	3/4, 7/8, 1, 1-1/8	—	—	2427
M100Q24L	2012979	100	68.50	59.91	13.81	28.75	4.50	8.59	5.50	7/8, 1, 1-1/8, 1-1/4	—	—	2068
M100Q24M	2012983	100	68.50	59.91	21.56	28.75	4.50	8.59	5.50	7/8, 1, 1-1/8, 1-1/4	—	—	2700
M100Q24H	2012987	100	68.50	59.91	25.56	28.75	4.50	8.59	5.50	7/8, 1, 1-1/8, 1-1/4	—	—	3180
M100QN18L	2012991	100	67.00	53.91	18.25	22.75	4.50	8.59	5.50	5/8, 3/4, 7/8, 1	1.50	2.28	1930
M100QN18M	2012995	100	67.00	53.91	22.38	22.75	4.50	8.59	5.50	5/8, 3/4, 7/8, 1	1.50	2.28	2170
M100QN18H	2012999	100	67.00	53.91	24.38	22.75	4.50	8.59	5.50	5/8, 3/4, 7/8, 1	1.50	2.28	2318
M100QN20L	2013003	100	69.00	55.41	18.25	24.75	4.50	8.59	5.50	3/4, 7/8, 1, 1-1/8	1.50	2.28	2044
M100QN20M	2013007	100	69.00	55.41	22.75	24.75	4.50	8.59	5.50	3/4, 7/8, 1, 1-1/8	1.50	2.28	2340
M100QN20H	2013011	100	69.00	55.41	26.75	24.75	4.50	8.59	5.50	3/4, 7/8, 1, 1-1/8	1.50	2.28	2692
M100QN24L	2013015	100	73.00	59.41	18.25	28.75	4.50	8.59	5.50	7/8, 1, 1-1/8, 1-1/4	1.50	2.28	2477
M100QN24M	2013019	100	73.00	59.41	26.00	28.75	4.50	8.59	5.50	7/8, 1, 1-1/8, 1-1/4	1.50	2.28	3145
M100QN24H	2013023	100	73.00	59.41	30.00	28.75	4.50	8.59	5.50	7/8, 1, 1-1/8, 1-1/4	1.50	2.28	3625
M100SX18L	2013027	100	67.00	53.41	20.41	22.75	4.50	8.59	5.50	5/8, 3/4, 7/8, 1	1.50	2.06	2080
M100SX18M	2013031	100	67.00	53.41	24.53	22.75	4.50	8.59	5.50	5/8, 3/4, 7/8, 1	1.50	2.06	2300
M100SX18H	2013035	100	67.00	53.41	26.53	22.75	4.50	8.59	5.50	5/8, 3/4, 7/8, 1	1.50	2.06	2448
M100SX20L	2013039	100	69.00	55.41	20.41	24.75	4.50	8.59	5.50	3/4, 7/8, 1, 1-1/8	1.50	2.06	2165
M100SX20M	2013043	100	69.00	55.41	24.91	24.75	4.50	8.59	5.50	3/4, 7/8, 1, 1-1/8	1.50	2.06	2462
M100SX20H	2013047	100	69.00	55.41	28.91	24.75	4.50	8.59	5.50	3/4, 7/8, 1, 1-1/8	1.50	2.06	2816
M100SX24L	2013051	100	73.00	59.41	20.41	28.75	4.50	8.59	5.50	7/8, 1, 1-1/8, 1-1/4	1.50	2.06	2615
M100SX24M	2013055	100	73.00	59.41	28.16	28.75	4.50	8.59	5.50	7/8, 1, 1-1/8, 1-1/4	1.50	2.06	3248
M100SX24H	2013059	100	73.00	59.41	32.16	28.75	4.50	8.59	5.50	7/8, 1, 1-1/8, 1-1/4	1.50	2.06	3730
115 Tons													
M115Q24L	2013075	115	72.00	62.88	16.44	28.75	4.50	9.12	6.00	7/8, 1, 1-1/8, 1-1/4	-	-	2753
M115Q24M	2013079	115	72.00	62.88	24.19	28.75	4.50	9.12	6.00	7/8, 1, 1-1/8, 1-1/4	-	-	3385
M115Q24H	2013083	115	72.00	62.88	28.19	28.75	4.50	9.12	6.00	7/8, 1, 1-1/8, 1-1/4	-	-	3865
M115QN24L	2013087	115	77.25	62.88	20.25	28.75	4.50	9.12	6.00	7/8, 1, 1-1/8, 1-1/4	1.75	2.53	3320
M115QN24M	2013091	115	77.25	62.88	28.00	28.75	4.50	9.12	6.00	7/8, 1, 1-1/8, 1-1/4	1.75	2.53	3950
M115QN24H	2013095	115	77.25	62.88	32.00	28.75	4.50	9.12	6.00	7/8, 1, 1-1/8, 1-1/4	1.75	2.53	4430
M115SX18L	2013099	115	71.25	56.88	22.00	22.75	4.50	9.12	6.00	5/8, 3/4, 7/8, 1	1.75	2.53	2645
M115SX18M	2013103	115	71.25	56.88	26.12	22.75	4.50	9.12	6.00	5/8, 3/4, 7/8, 1	1.75	2.53	2885
M115SX18H	2013107	115	71.25	56.88	28.12	22.75	4.50	9.12	6.00	5/8, 3/4, 7/8, 1	1.75	2.53	3033
M115SX20L	2013111	115	73.25	58.88	22.00	24.75	4.50	9.12	6.00	3/4, 7/8, 1, 1-1/8	1.75	2.53	2849
M115SX20M	2013115	115	73.25	58.88	26.50	24.75	4.50	9.12	6.00	3/4, 7/8, 1, 1-1/8	1.75	2.53	3145
M115SX20H	2013119	115	73.25	58.88	30.50	24.75	4.50	9.12	6.00	3/4, 7/8, 1, 1-1/8	1.75	2.53	3497
M115SX24L	2013123	115	77.25	62.88	22.03	28.75	4.50	9.12	6.00	7/8, 1, 1-1/8, 1-1/4	1.75	2.53	3325
M115SX24M	2013127	115	77.25	62.88	29.78	28.75	4.50	9.12	6.00	7/8, 1, 1-1/8, 1-1/4	1.75	2.53	3957
M115SX24H	2013131	115	77.25	62.88	33.78	28.75	4.50	9.12	6.00	7/8, 1, 1-1/8, 1-1/4	1.75	2.53	4437
125 Tons													
M125Q24L	2013135	125	72	62.88	16.44	28.75	4.50	9.12	6.00	7/8, 1, 1-1/8, 1-1/4	-	-	2753

Copyright © 2016 The Crosby Group LLC All Rights Reserved

380 Series Crane Blocks

Model No.	Inquiry Stock No.	Working Load Limit (Tons) †	A Overall Length (in.)	B Net Length (in.)	E Thickness (in.)	F Width (in.)	H Throat Opening with Flapper (in.)	J Hook Thickness (in.)	K Hook Width (in.)	Standard Wireline Sizes (in.)*	Dead End ‡ T Thickness (in.)	Dead End ‡ U Pin Hole (in.)	Weight Each (lbs.)
M125Q24M	2013139	125	72.00	62.88	24.19	28.75	4.50	9.12	6.00	7/8, 1, 1-1/8, 1-1/4	-	-	3385
M125Q24H	2013143	125	72.00	62.88	28.19	28.75	4.50	9.12	6.00	7/8, 1, 1-1/8, 1-1/4	-	-	3865
M125QN24L	2013147	125	77.25	62.88	20.25	28.75	4.50	9.12	6.00	7/8, 1, 1-1/8, 1-1/4	1.75	2.53	3320
M125QN24M	2013151	125	77.25	62.88	28.00	28.75	4.50	9.12	6.00	7/8, 1, 1-1/8, 1-1/4	1.75	2.53	3950
M125QN24H	2013155	125	77.25	62.88	32.00	28.75	4.50	9.12	6.00	7/8, 1, 1-1/8, 1-1/4	1.75	2.53	4430
M125SX18L	2013159	125	71.25	56.88	22.00	22.75	4.50	9.12	6.00	5/8, 3/4, 7/8, 1	1.75	2.53	2645
M125SX18M	2013163	125	71.25	56.88	26.12	22.75	4.50	9.12	6.00	5/8, 3/4, 7/8, 1	1.75	2.53	2885
M125SX18H	2013167	125	71.25	56.88	28.12	22.75	4.50	9.12	6.00	5/8, 3/4, 7/8, 1	1.75	2.53	3033
M125SX20L	2013171	125	73.25	58.88	22.00	24.75	4.50	9.12	6.00	3/4, 7/8, 1, 1-1/8	1.75	2.53	2849
M125SX20M	2013175	125	73.25	58.88	26.50	24.75	4.50	9.12	6.00	3/4, 7/8, 1, 1-1/8	1.75	2.53	3145
M125SX20H	2013179	125	73.25	58.88	30.50	24.75	4.50	9.12	6.00	3/4, 7/8, 1, 1-1/8	1.75	2.53	3497
M125SX24L	2013183	125	77.25	62.88	22.03	28.75	4.50	9.12	6.00	7/8, 1, 1-1/8, 1-1/4	1.75	2.53	3325
M125SX24M	2013187	125	77.25	62.88	29.78	28.75	4.50	9.12	6.00	7/8, 1, 1-1/8, 1-1/4	1.75	2.53	3957
M125SX24H	2013188	125	77.25	62.88	33.78	28.75	4.50	9.12	6.00	7/8, 1, 1-1/8, 1-1/4	1.75	2.53	4437
130 Tons													
M130Q24L	2013192	130	72.00	62.88	16.44	28.75	4.50	9.12	6.00	7/8, 1, 1-1/8, 1-1/4	-	-	2753
M130Q24M	2013196	130	72.00	62.88	24.19	28.75	4.50	9.12	6.00	7/8, 1, 1-1/8, 1-1/4	-	-	3385
M130Q24H	2013200	130	72.00	62.88	28.19	28.75	4.50	9.12	6.00	7/8, 1, 1-1/8, 1-1/4	-	-	3865
M130QN24L	2013191	130	77.25	62.88	20.25	28.75	4.50	9.12	6.00	7/8, 1, 1-1/8, 1-1/4	1.75	2.53	3320
M130QN24M	2013195	130	77.25	62.88	28.00	28.75	4.50	9.12	6.00	7/8, 1, 1-1/8, 1-1/4	1.75	2.53	3950
M130QN24H	2013199	130	77.25	62.88	32.00	28.75	4.50	9.12	6.00	7/8, 1, 1-1/8, 1-1/4	1.75	2.53	4430
M130SX18L	2013203	130	71.25	56.88	22.00	22.75	4.50	9.12	6.00	5/8, 3/4, 7/8, 1	1.75	2.53	2645
M130SX18M	2013207	130	71.25	56.88	26.12	22.75	4.50	9.12	6.00	5/8, 3/4, 7/8, 1	1.75	2.53	2885
M130SX18H	2013211	130	71.25	56.88	28.12	22.75	4.50	9.12	6.00	5/8, 3/4, 7/8, 1	1.75	2.53	3033
M130SX20L	2013218	130	73.25	58.88	22.00	24.75	4.50	9.12	6.00	3/4, 7/8, 1, 1-1/8	1.75	2.53	2849
M130SX20M	2013219	130	73.25	58.88	26.50	24.75	4.50	9.12	6.00	3/4, 7/8, 1, 1-1/8	1.75	2.53	3145
M130SX20H	2013223	130	73.25	58.88	30.50	24.75	4.50	9.12	6.00	3/4, 7/8, 1, 1-1/8	1.75	2.53	3497
M130SX24L	2013227	130	77.25	62.88	22.03	28.75	4.50	9.12	6.00	7/8, 1, 1-1/8, 1-1/4	1.75	2.53	3325
M130SX24M	2013231	130	77.25	62.88	29.78	28.75	4.50	9.12	6.00	7/8, 1, 1-1/8, 1-1/4	1.75	2.53	3957
M130SX24H	2013235	130	77.25	62.88	33.78	28.75	4.50	9.12	6.00	7/8, 1, 1-1/8, 1-1/4	1.75	2.53	4437
140 Tons													
M140Q24L	2013252	140	72.00	62.88	16.44	28.75	4.50	9.12	6.00	7/8, 1, 1-1/8, 1-1/4	—	—	2753
M140Q24M	2013256	140	72.00	62.88	24.19	28.75	4.50	9.12	6.00	7/8, 1, 1-1/8, 1-1/4	—	—	3385
M140Q24H	2013260	140	72.00	62.88	28.19	28.75	4.50	9.12	6.00	7/8, 1, 1-1/8, 1-1/4	—	—	3865
M140QN24L	2013251	140	77.25	62.88	20.25	28.75	4.50	9.12	6.00	7/8, 1, 1-1/8, 1-1/4	1.75	2.53	3320
M140QN24M	2013255	140	77.25	62.88	28.00	28.75	4.50	9.12	6.00	7/8, 1, 1-1/8, 1-1/4	1.75	2.53	3950
M140QN24H	2013259	140	77.25	62.88	32.00	28.75	4.50	9.12	6.00	7/8, 1, 1-1/8, 1-1/4	1.75	2.53	4430
M140SX18L	2013263	140	71.25	56.88	22.00	22.75	4.50	9.12	6.00	5/8, 3/4, 7/8, 1	1.75	2.53	2645
M140SX18M	2013267	140	71.25	56.88	26.12	22.75	4.50	9.12	6.00	5/8, 3/4, 7/8, 1	1.75	2.53	2885
M140SX18H	2013271	140	71.25	56.88	28.12	22.75	4.50	9.12	6.00	5/8, 3/4, 7/8, 1	1.75	2.53	3033
M140SX20L	2013275	140	73.25	58.88	22.00	24.75	4.50	9.12	6.00	3/4, 7/8, 1, 1-1/8	1.75	2.53	2849
M140SX20M	2013279	140	73.25	58.88	26.50	24.75	4.50	9.12	6.00	3/4, 7/8, 1, 1-1/8	1.75	2.53	3145
M140SX20H	2013283	140	73.25	58.88	30.50	24.75	4.50	9.12	6.00	3/4, 7/8, 1, 1-1/8	1.75	2.53	3497
M140SX24L	2013287	140	77.25	62.88	22.03	28.75	4.50	9.12	6.00	7/8, 1, 1-1/8, 1-1/4	1.75	2.53	3325
M140SX24M	2013291	140	77.25	62.88	29.78	28.75	4.50	9.12	6.00	7/8, 1, 1-1/8, 1-1/4	1.75	2.53	3957
M140SX24H	2013295	140	77.25	62.88	33.78	28.75	4.50	9.12	6.00	7/8, 1, 1-1/8, 1-1/4	1.75	2.53	4437
150 Tons													
M150Q24L	2013299	150	72.00	62.88	16.44	28.75	4.50	9.12	6.00	7/8, 1, 1-1/8, 1-1/4	—	—	2753
M150Q24M	2013303	150	72.00	62.88	24.19	28.75	4.50	9.12	6.00	7/8, 1, 1-1/8, 1-1/4	—	—	3385
M150Q24H	2013307	150	72.00	62.88	28.19	28.75	4.50	9.12	6.00	7/8, 1, 1-1/8, 1-1/4	—	—	3865
M150QN24L	2013311	150	77.25	62.88	22.00	28.75	4.50	9.12	6.00	7/8, 1, 1-1/8, 1-1/4	1.75	2.53	3655
M150QN24M	2013315	150	77.25	62.88	29.75	28.75	4.50	9.12	6.00	7/8, 1, 1-1/8, 1-1/4	1.75	2.53	4288
M150QN24H	2013319	150	77.25	62.88	33.75	28.75	4.50	9.12	6.00	7/8, 1, 1-1/8, 1-1/4	1.75	2.53	4770
M150SX20L	2013323	150	73.25	58.88	22.00	24.75	4.50	9.12	6.00	3/4, 7/8, 1, 1-1/8	1.75	2.53	2849
M150SX20M	2013327	150	73.25	58.88	26.50	24.75	4.50	9.12	6.00	3/4, 7/8, 1, 1-1/8	1.75	2.53	3145
M150SX20H	2013331	150	73.25	58.88	30.50	24.75	4.50	9.12	6.00	3/4, 7/8, 1, 1-1/8	1.75	2.53	3497
M150SX24L	2013335	150	77.25	62.88	22.03	28.75	4.50	9.12	6.00	7/8, 1, 1-1/8, 1-1/4	1.75	2.53	3325
M150SX24M	2013339	150	77.25	62.88	29.78	28.75	4.50	9.12	6.00	7/8, 1, 1-1/8, 1-1/4	1.75	2.53	3957
M150SX24H	2013343	150	77.25	62.88	33.78	28.75	4.50	9.12	6.00	7/8, 1, 1-1/8, 1-1/4	1.75	2.53	4437
165 Tons													
M165Q24L	2013347	165	72.00	62.88	16.44	28.75	4.50	9.12	6.00	7/8, 1, 1-1/8, 1-1/4	—	—	2753
M165Q24M	2013351	165	72.00	62.88	24.19	28.75	4.50	9.12	6.00	7/8, 1, 1-1/8, 1-1/4	—	—	3385
M165Q24H	2013355	165	72.00	62.88	28.19	28.75	4.50	9.12	6.00	7/8, 1, 1-1/8, 1-1/4	—	—	3865
M165QN24L	2013359	165	77.25	62.88	22.00	28.75	4.50	9.12	6.00	7/8, 1, 1-1/8, 1-1/4	1.75	2.53	3655
M165QN24M	2013363	165	77.25	62.88	29.75	28.75	4.50	9.12	6.00	7/8, 1, 1-1/8, 1-1/4	1.75	2.53	4288
M165QN24H	2013367	165	77.25	62.88	33.75	28.75	4.50	9.12	6.00	7/8, 1, 1-1/8, 1-1/4	1.75	2.53	4770
M165SX20L	2013371	165	73.25	58.88	22.00	24.75	4.50	9.12	6.00	3/4, 7/8, 1, 1-1/8	1.75	2.53	2849
M165SX20M	2013375	165	73.25	58.88	26.50	24.75	4.50	9.12	6.00	3/4, 7/8, 1, 1-1/8	1.75	2.53	3145
M165SX20H	2013379	165	73.25	58.88	30.50	34.75	4.50	9.12	6.00	3/4, 7/8, 1, 1-1/8	1.75	2.53	3497
M165SX24L	2013383	165	77.25	62.88	22.03	28.75	4.50	9.12	6.00	7/8, 1, 1-1/8, 1-1/4	1.75	2.53	3325

Copyright © 2016 The Crosby Group LLC All Rights Reserved

McKissick® 380 Series Crane Blocks

380 Series Crane Blocks

Model No.	Inquiry Stock No.	Working Load Limit (Tons) †	A Overall Length (in.)	B Net Length (in.)	E Thickness (in.)	F Width (in.)	H Throat Opening with Flapper (in.)	J Hook Thickness (in.)	K Hook Width (in.)	Standard Wireline Sizes (in.)*	Dead End ‡ T Thickness (in.)	Dead End ‡ U Pin Hole (in.)	Weight Each (lbs.)
M165SX24M	2013387	165	77.25	62.88	29.78	28.75	4.50	9.12	6.00	7/8, 1, 1-1/8, 1-1/4	1.75	2.53	3957
M165SX24H	2013391	165	77.25	62.88	33.78	28.75	4.50	9.12	6.00	7/8, 1, 1-1/8, 1-1/4	1.75	2.53	4437
200 Tons													
M200QN24L	2013395	200	82.75	67.75	24.00	28.75	5.00	9.75	7.00	7/8, 1, 1-1/8, 1-1/4	1.75	2.53	4600
M200QN24M	2013399	200	82.75	67.75	31.75	28.75	5.00	9.75	7.00	7/8, 1, 1-1/8, 1-1/4	1.75	2.53	5377
M200QN24H	2013403	200	82.75	67.75	35.75	28.75	5.00	9.75	7.00	7/8, 1, 1-1/8, 1-1/4	1.75	2.53	5840
M200QN30L	2013396	200	88.75	73.75	24.00	34.75	5.00	9.75	7.00	1, 1-1/8, 1-1/4, 1-3/8	1.75	2.53	5243
M200QN30M	2013400	200	88.75	73.75	26.50	34.75	5.00	9.75	7.00	1, 1-1/8, 1-1/4, 1-3/8	1.75	2.53	6142
M200QN30H	2013404	200	88.75	73.75	28.00	34.75	5.00	9.75	7.00	1, 1-1/8, 1-1/4, 1-3/8	1.75	2.53	6722
M200SX24L	2013407	200	82.75	67.75	24.00	28.75	5.00	9.75	7.00	7/8, 1, 1-1/8, 1-1/4	1.75	2.53	4377
M200SX24M	2013411	200	82.75	67.75	31.75	28.75	5.00	9.75	7.00	7/8, 1, 1-1/8, 1-1/4	1.75	2.53	5015
M200SX24H	2013415	200	82.75	67.75	35.75	28.75	5.00	9.75	7.00	7/8, 1, 1-1/8, 1-1/4	1.75	2.53	5492
M200SX30L	2013419	200	88.75	73.75	24.00	34.75	5.00	9.75	7.00	1, 1-1/8, 1-1/4, 1-3/8	1.75	2.53	5600
M200SX30M	2013423	200	88.75	73.75	26.50	34.75	5.00	9.75	7.00	1, 1-1/8, 1-1/4, 1-3/8	1.75	2.53	7070
M200SX30H	2013427	200	88.75	73.75	28.00	34.75	5.00	9.75	7.00	1, 1-1/8, 1-1/4, 1-3/8	1.75	2.53	7214
225 Tons													
M225QN24L	2013420	225	82.75	67.75	24.00	28.75	6.25	10.62	7.25	7/8, 1, 1-1/8, 1-1/4	1.75	2.53	4672
M225QN24M	2013424	225	82.75	67.75	31.75	28.75	6.25	10.62	7.25	7/8, 1, 1-1/8, 1-1/4	1.75	2.53	5377
M225QN24H	2013428	225	82.75	67.75	35.75	28.75	6.25	10.62	7.25	7/8, 1, 1-1/8, 1-1/4	1.75	2.53	5840
M225QN30L	2013421	225	88.75	73.75	24.00	34.75	6.25	10.62	7.25	1, 1-1/8, 1-1/4, 1-3/8	1.75	2.53	5243
M225QN30M	2013425	225	88.75	73.75	26.50	34.75	6.25	10.62	7.25	1, 1-1/8, 1-1/4, 1-3/8	1.75	2.53	6142
M225QN30H	2013429	225	88.75	73.75	28.00	34.75	6.25	10.62	7.25	1, 1-1/8, 1-1/4, 1-3/8	1.75	2.53	6722
M225SX24L	2013422	225	82.75	67.75	24.00	28.75	6.25	10.62	7.25	7/8, 1, 1-1/8, 1-1/4	1.75	2.53	4377
M225SX24M	2013426	225	82.75	67.75	31.75	28.75	6.25	10.62	7.25	7/8, 1, 1-1/8, 1-1/4	1.75	2.53	5010
M225SX24H	2013430	225	82.75	67.75	35.75	28.75	6.25	10.62	7.25	7/8, 1, 1-1/8, 1-1/4	1.75	2.53	5492
M225SX30L	2013432	225	88.75	73.75	24.00	34.75	6.25	10.62	7.25	1, 1-1/8, 1-1/4, 1-3/8	1.75	2.53	5734
M225SX30M	2013436	225	88.75	73.75	26.50	34.75	6.25	10.62	7.25	1, 1-1/8, 1-1/4, 1-3/8	1.75	2.53	6634
M225SX30H	2013440	225	88.75	73.75	28.00	34.75	6.25	10.62	7.25	1, 1-1/8, 1-1/4, 1-3/8	1.75	2.53	7214
250 Tons													
M250SX30L	2013431	250	93.25	77.38	28.50	36.50	6.25	10.62	7.25	1, 1-1/8, 1-1/4, 1-3/8	2.25	2.53	7274
M250SX30M	2013435	250	93.25	77.38	32.50	36.50	6.25	10.62	7.25	1, 1-1/8, 1-1/4, 1-3/8	2.25	2.53	8154
M250SX30H	2013439	250	93.25	77.38	34.50	36.50	6.25	10.62	7.25	1, 1-1/8, 1-1/4, 1-3/8	2.25	2.53	8724
M250SV24L	2013443	250	87.25	71.38	36.00	28.75	6.25	10.62	7.25	7/8, 1, 1-1/8, 1-1/4	2.25	2.53	6459
M250SV24M	2013447	250	87.25	71.38	43.75	28.75	6.25	10.62	7.25	7/8, 1, 1-1/8, 1-1/4	2.25	2.53	7163
M250SV24H	2013451	250	87.25	71.38	47.75	28.75	6.25	10.62	7.25	7/8, 1, 1-1/8, 1-1/4	2.25	2.53	7628
275 Tons													
M275SX30L	2013456	275	93.25	77.38	28.50	36.50	6.25	10.62	7.25	1, 1-1/8, 1-1/4, 1-3/8	2.25	2.53	7274
M275SX30M	2013460	275	93.25	77.38	32.50	36.50	6.25	10.62	7.25	1, 1-1/8, 1-1/4, 1-3/8	2.25	2.53	8154
M275SX30H	2013464	275	93.25	77.38	34.50	36.50	6.25	10.62	7.25	1, 1-1/8, 1-1/4, 1-3/8	2.25	2.53	8724
M275SV24L	2013457	275	87.25	71.38	36.00	28.75	6.25	10.62	7.25	7/8, 1, 1-1/8, 1-1/4	2.25	2.53	6459
M275SV24M	2013461	275	87.25	71.38	43.75	28.75	6.25	10.62	7.25	7/8, 1, 1-1/8, 1-1/4	2.25	2.53	7163
M275SV24H	2013465	275	87.25	71.38	47.75	28.75	6.25	10.62	7.25	7/8, 1, 1-1/8, 1-1/4	2.25	2.53	7628
300 Tons													
M300SX30L	2013479	300	93.25	77.38	28.50	36.50	6.25	10.62	7.25	1, 1-1/8, 1-1/4, 1-3/8	2.25	2.53	7274
M300SX30M	2013483	300	93.25	77.38	32.50	36.50	6.25	10.62	7.25	1, 1-1/8, 1-1/4, 1-3/8	2.25	2.53	8154
M300SX30H	2013487	300	93.25	77.38	34.50	36.50	6.25	10.62	7.25	1, 1-1/8, 1-1/4, 1-3/8	2.25	2.53	8724
M300SV24L	2013491	300	87.25	71.38	36.00	28.75	6.25	10.62	7.25	7/8, 1, 1-1/8, 1-1/4	2.25	2.53	6459
M300SV24M	2013495	300	87.25	71.38	43.75	28.75	6.25	10.62	7.25	7/8, 1, 1-1/8, 1-1/4	2.25	2.53	7163
M300SV24H	2013499	300	87.25	71.38	47.75	28.75	6.25	10.62	7.25	7/8, 1, 1-1/8, 1-1/4	2.25	2.53	7628
M300OCT30L	2013527	300	93.25	77.38	36.00	36.50	6.25	10.62	7.25	1, 1-1/8, 1-1/4, 1-3/8	2.25	2.53	10145
	2013531	300	93.25	77.38	38.00	36.50	6.25	10.62	7.25	1, 1-1/8, 1-1/4, 1-3/8	2.25	2.53	10887
	2013535	300	93.25	77.38	39.00	36.50	6.25	10.62	7.25	1, 1-1/8, 1-1/4, 1-3/8	2.25	2.53	11592

* Additional Wireline sizes available upon request.
† Ultimate Load is 4 times the Working Load Limit unless otherwise noted.
‡ Dead End dimensions for 2, 3, & 4 sheave blocks are shown on page 310.

Copyright © 2016 The Crosby Group LLC All Rights Reserved